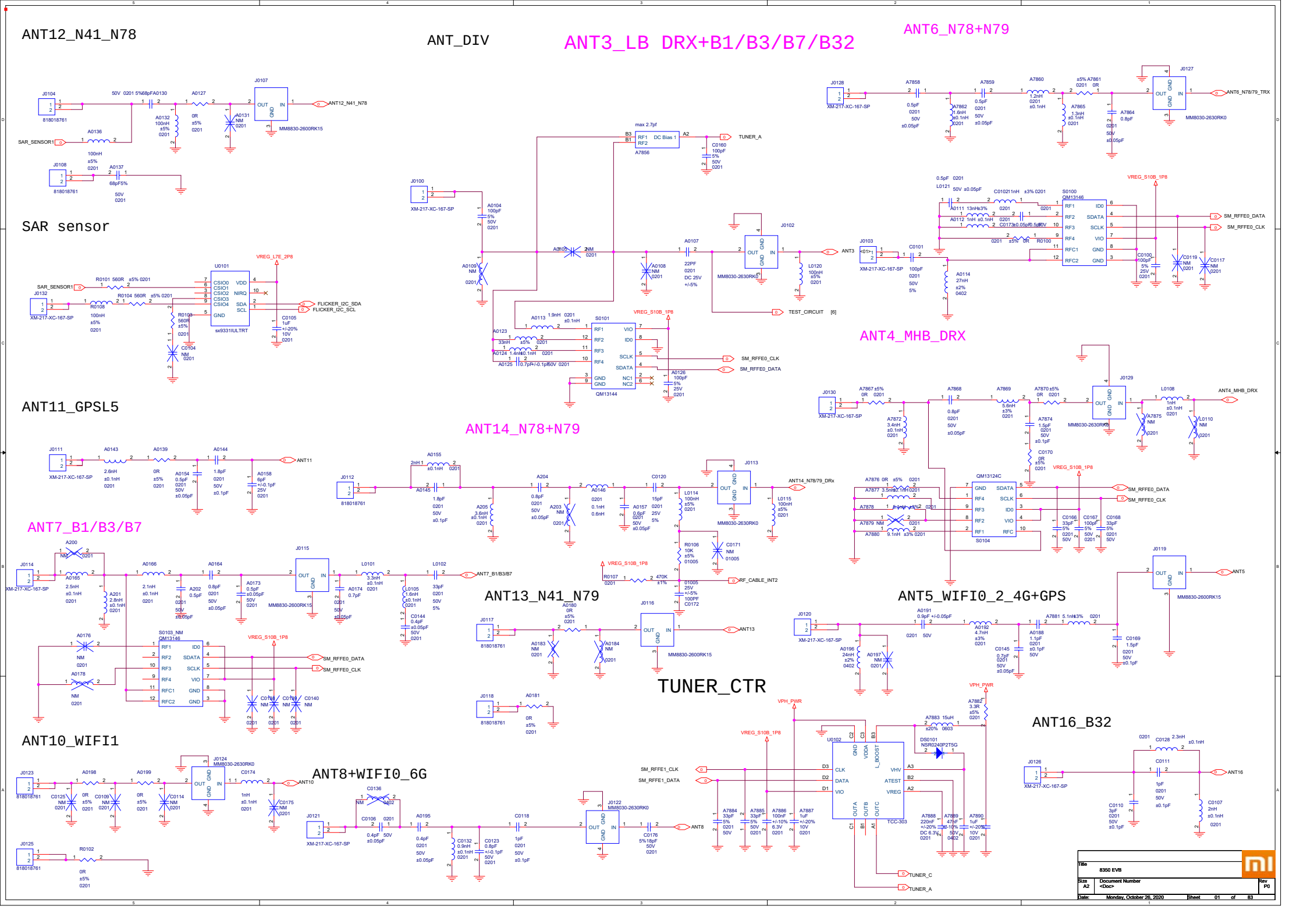
ANT12_N41_N78
ANT_DIV
ANT3_LB DRX+B1/B3/B7/B32
ANT6_N78+N79
SAR sensor
ANT11_GPSL5
ANT4_MHB_DRX
ANT14_N78+N79
ANT7_B1/B3/B7
ANT13_N41_N79
ANT5_WIFI0_2_4G+GPS
TUNER_CTR
ANT10_WIFI1
ANT8+WIFI0_6G
ANT16_B32
SAR_SENSOR1
ANT12_N41_N78
TUNER_A
ANT3
TEST_CIRCUIT
SM_RFFE0_DATA
SM_RFFE0_CLK
FLICKER_I2C_SDA
FLICKER_I2C_SCL
ANT11
ANT4_MHB_DRX
ANT14_N78/79_DRx
ANT7_B1/B3/B7
RF_CABLE_INT2
ANT13
ANT5
ANT10
ANT8
ANT16
TUNER_C
VPH_PWR
VREG_S10B_1P8
VREG_L7E_2P8
Title
8350 EVB
Size
A2
Document Number
<Doc>
Rev
P0
Date:
Monday, October 26, 2020
Sheet
01
of
83

ANT15_B32

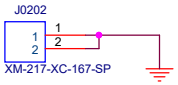

Title	8350 EVB	
Size A3	Document Number Reserved(for ANT)	Rev P0
Date: Monday, October 26, 2020	Sheet 02 of 83	

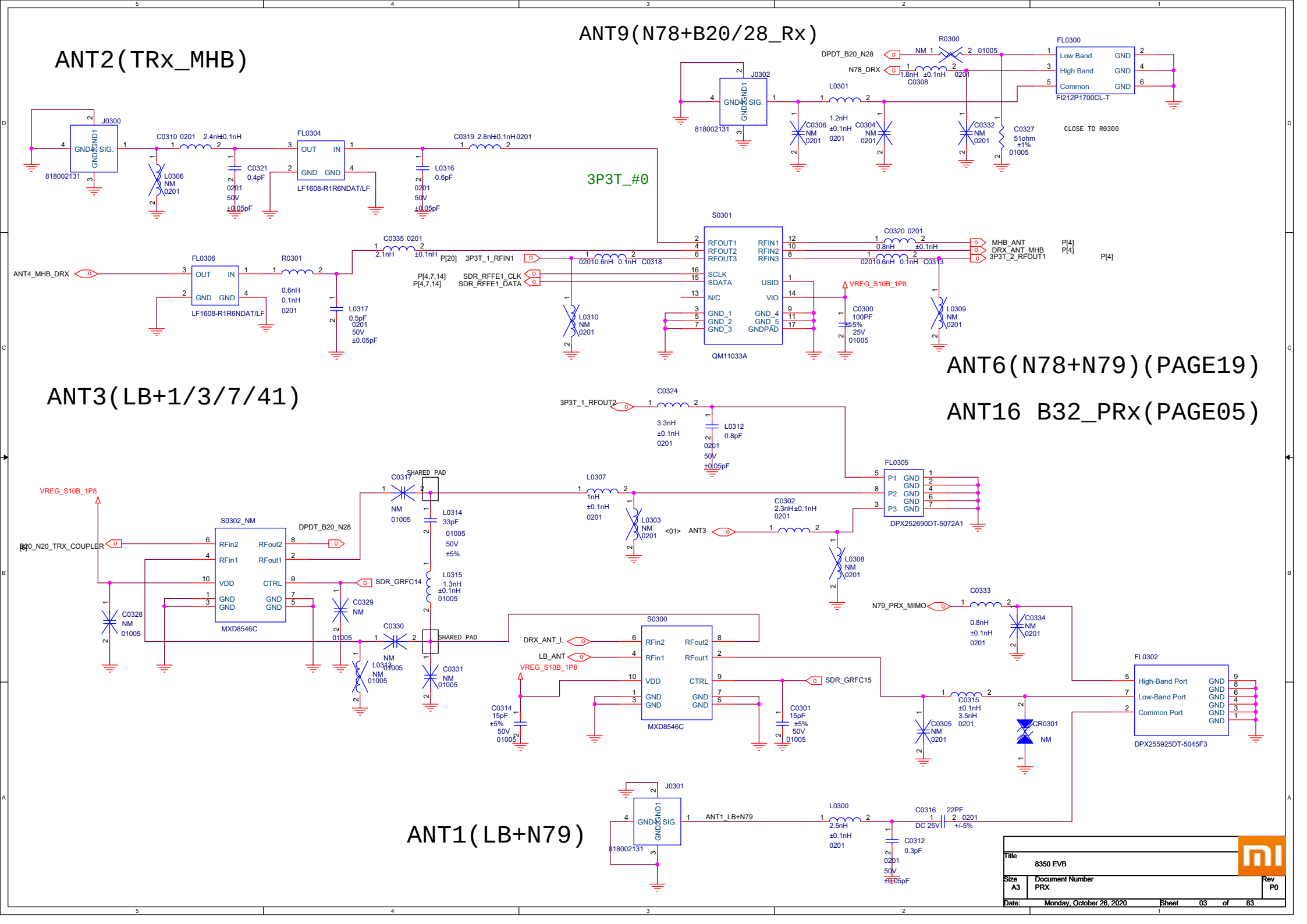
ANT2(TRx_MHB)
ANT9(N78+B20/28_Rx)
3P3T_#0
ANT6(N78+N79)(PAGE19)
ANT3(LB+1/3/7/41)
ANT16 B32_PRx(PAGE05)
ANT1(LB+N79)
J0300
J0302
J0301
FL0300
FL0304
FL0306
FL0305
FL0302
S0301
S0300
S0302_NM
R0300
L0301
L0306
L0316
L0317
L0310
L0309
L0312
L0307
L0303
L0308
L0314
L0315
L0313
L0300
C0310
C0319
C0321
C0335
C0318
C0320
C0313
C0324
C0317
C0329
C0330
C0331
C0328
C0302
C0333
C0334
C0315
C0305
C0316
C0312
C0314
C0301
C0300
C0306
C0304
C0332
C0327
C0308
LF1608-R1R6NDAT/LF
QM11033A
DPX252690DT-5072A1
DPX255925DT-5045F3
MXD8546C
FI212P1700CL-T
CLOSE TO R0300
DPDT_B20_N28
N78_DRX
ANT4_MHB_DRX
3P3T_1_RFIN1
SDR_RFFE1_CLK
SDR_RFFE1_DATA
3P3T_1_RFOUT2
MHB_ANT
DRX_ANT_MHB
3P3T_2_RFOUT1
VREG_S10B_1P8
B20_N20_TRX_COUPLER
SDR_GRFC14
SDR_GRFC15
DRX_ANT_L
LB_ANT
N79_PRX_MIMO
ANT3
ANT1_LB+N79
SHARED PAD
Title
8350 EVB
Size
A3
Document Number
PRX
Rev
P0
Date:
Monday, October 26, 2020
Sheet
03
of
83

ANT7_N1/N3/N7(PAGE05)

ANT14_N78+N79 (PAGE20)

ANT4_MHB(PAGE21)

ANT15_B32_DRx (PAGE05)

ANT12(N78+N41)

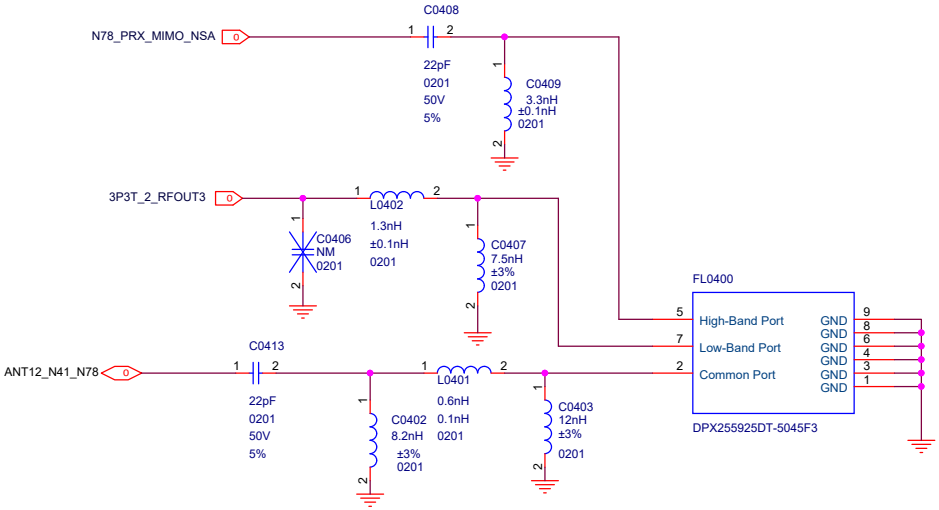

ANT13(N41+N79)

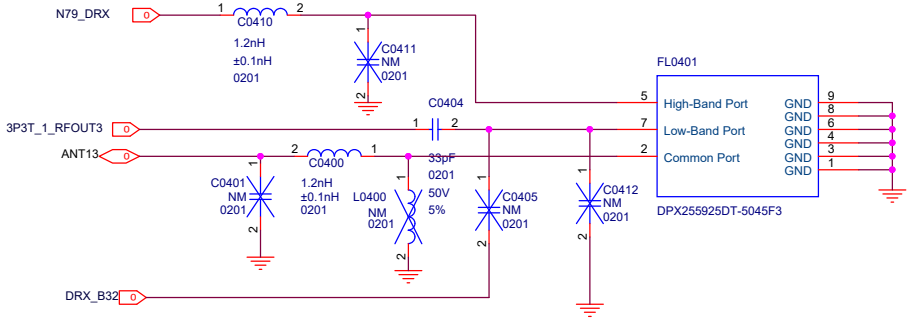

Title	8350 EVB	
Size A3	Document Number Reserved(for ANT)	Rev P0
Date: Monday, October 26, 2020	Sheet 04 of 83	

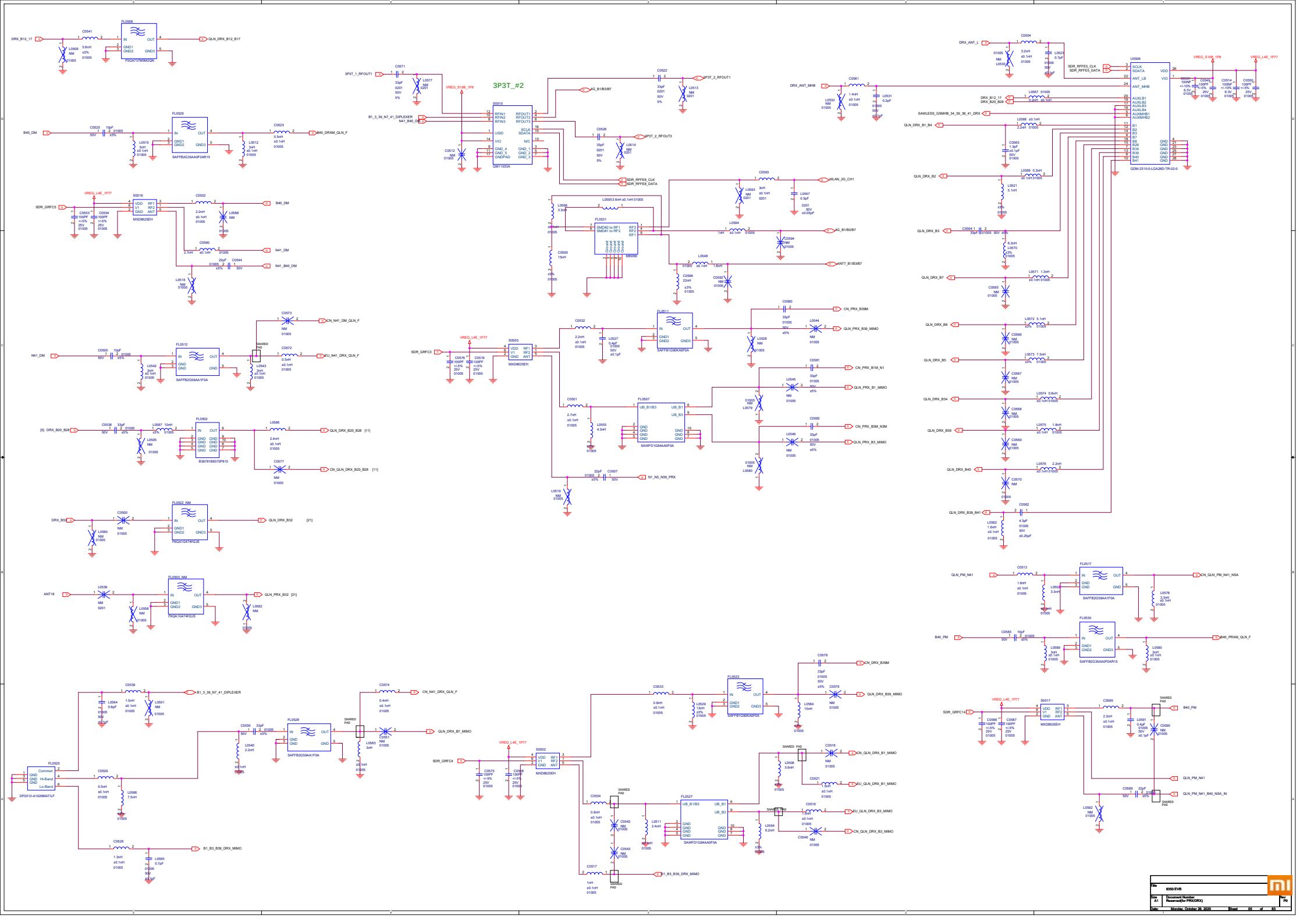
3P3T_#2
DRX_B12_17
GLN_DRX_B12_B17
B40_DM
B40_DRXM_GLN_F
SDR_GRFC5
N41_DM
N41_B40_DM
CN_N41_DM_GLN_F
EU_N41_DRX_GLN_F
[5] DRX_B20_B28
GLN_DRX_B20_B28 [11]
CN_GLN_DRX_B20_B28 [11]
DRX_B32
GLN_DRX_B32 [21]
ANT16
GLN_PRX_B32 [21]
B1_3_39_N7_41_DIPLEXER
CN_N41_DRX_GLN_F
GLN_DRX_B7_MIMO
SDR_GRFC4
B1_B3_B39_DRX_MIMO
3P3T_1_RFOUT1
3P3T_2_RFOUT1
3P3T_2_RFOUT3
B1_3_39_N7_41_DIPLEXER
N41_B40_DM
SDR_RFFE5_CLK
SDR_RFFE5_DATA
WLAN_2G_CH1
ANT7_B1B3B7
CN_PRX_B39M
GLN_PRX_B39_MIMO
CN_PRX_B1M_N1
GLN_PRX_B1_MIMO
CN_PRX_B3M_N3M
GLN_PRX_B3_MIMO
N1_N3_N39_PRX
DRX_ANT_L
DRX_ANT_MHB
DRX_B12_17
DRX_B20_B28
SAWLESS_GSMHB_34_39_38_41_DRX
GLN_DRX_B1_B4
GLN_DRX_B2
GLN_DRX_B3
GLN_DRX_B7
GLN_DRX_B8
GLN_DRX_B5
GLN_DRX_B34
GLN_DRX_B39
GLN_DRX_B40
GLN_DRX_B38_B41
GLN_PM_N41
CN_GLN_PM_N41_NSA
B40_PM
B40_PRXM_GLN_F
SDR_GRFC14
GLN_PM_N41
GLN_PM_N41_B40_NSA_IN
VREG_L4E_1P77
VREG_S10B_1P8
VREG_L4E_1P8
FL0508
FL0529
FL0512
FL0502
FL0522_NM
FL0503_NM
FL0525
FL0528
FL0531
FL0511
FL0507
FL0523
FL0527
FL0517
FL0530
S0515
S0516
S0503
S0552
S0517
QM11033A
MXD8625EH
SAFFB2G35AA0F0AR15
SAFFB2G59AA1F0A
SAFFB1G90KA0F0A
SAWFD1G84AA0F0A
SAWFB1G90KA0F0A
B39781B8370P810
DP2012-A1928MATILF
QDM-2310-0-LGA28D-TR-02-0
SHARED PAD
File: B350 EVB
Size: A1
Document Number: Reserved for PRX(DRX)
Rev: P0
Date: Monday, October 26, 2020
Sheet 05 of 83

LB S-PAD

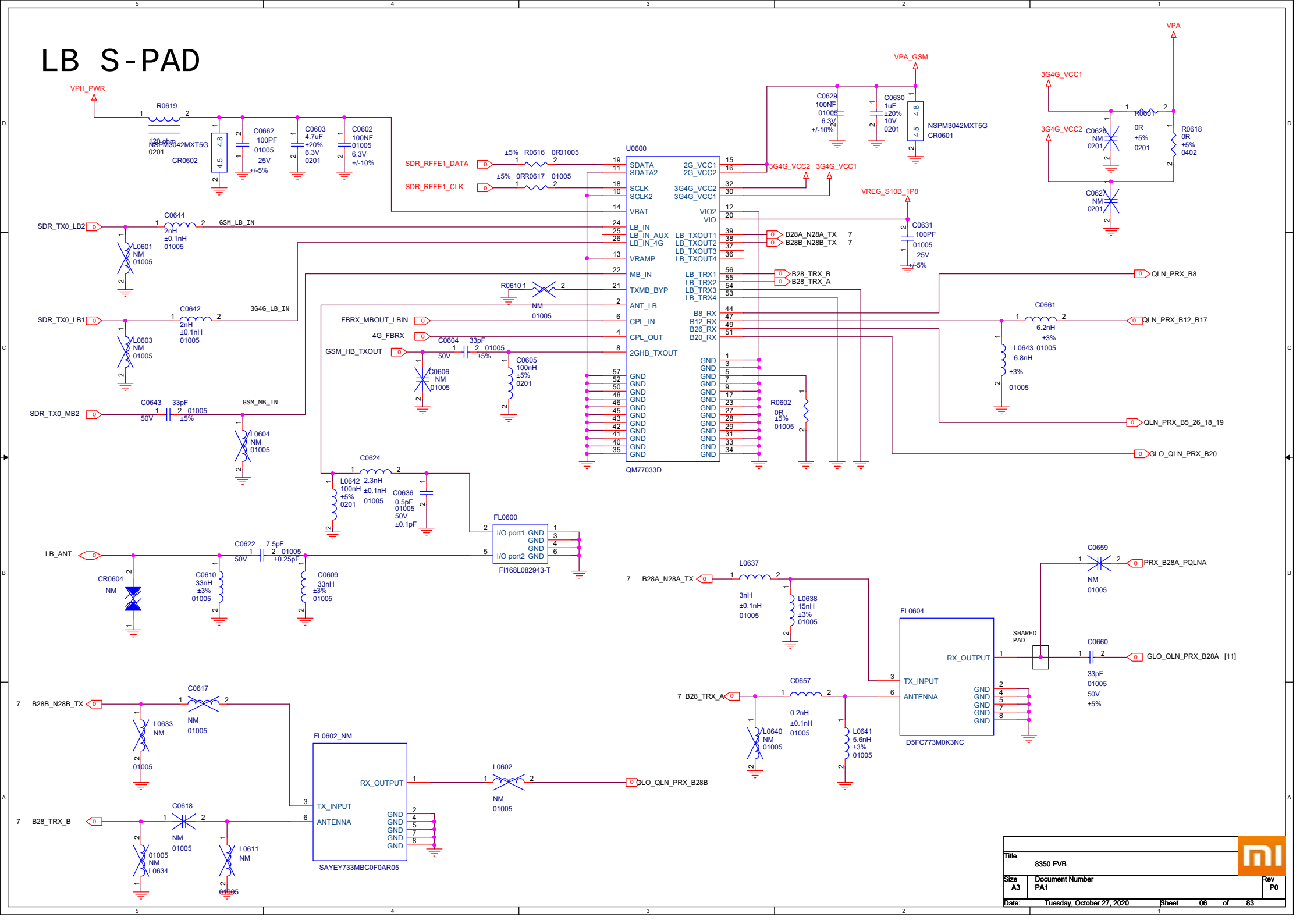

Title	8350 EVB	
Size A3	Document Number PA1	Rev P0
Date: Tuesday, October 27, 2020	Sheet 06 of 83	

MHB S-PAD

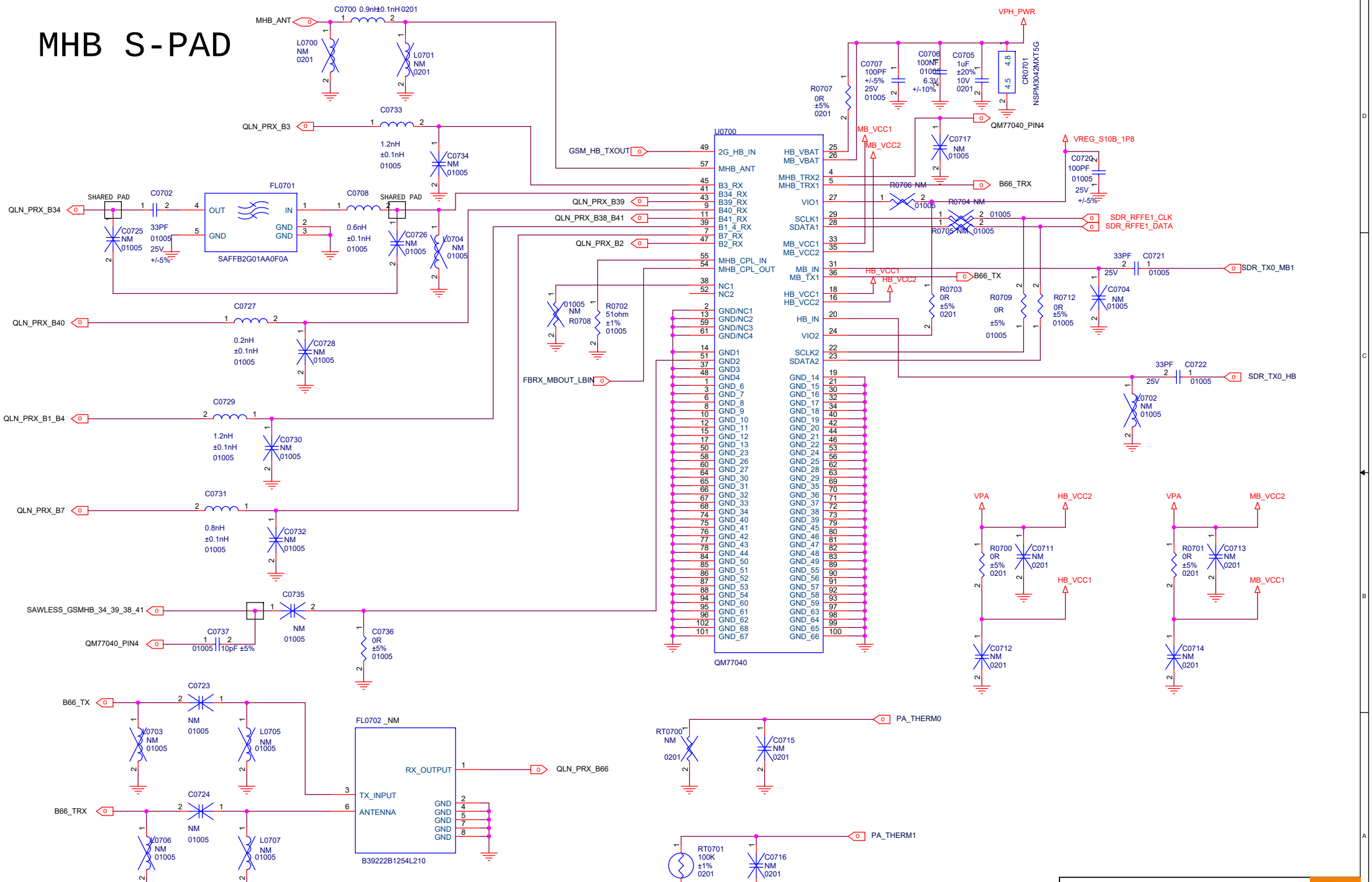

Title	8350 EVB	
Size A3	Document Number PA2	Rev P0
Date: Monday, October 26, 2020	Sheet 07 of 83	

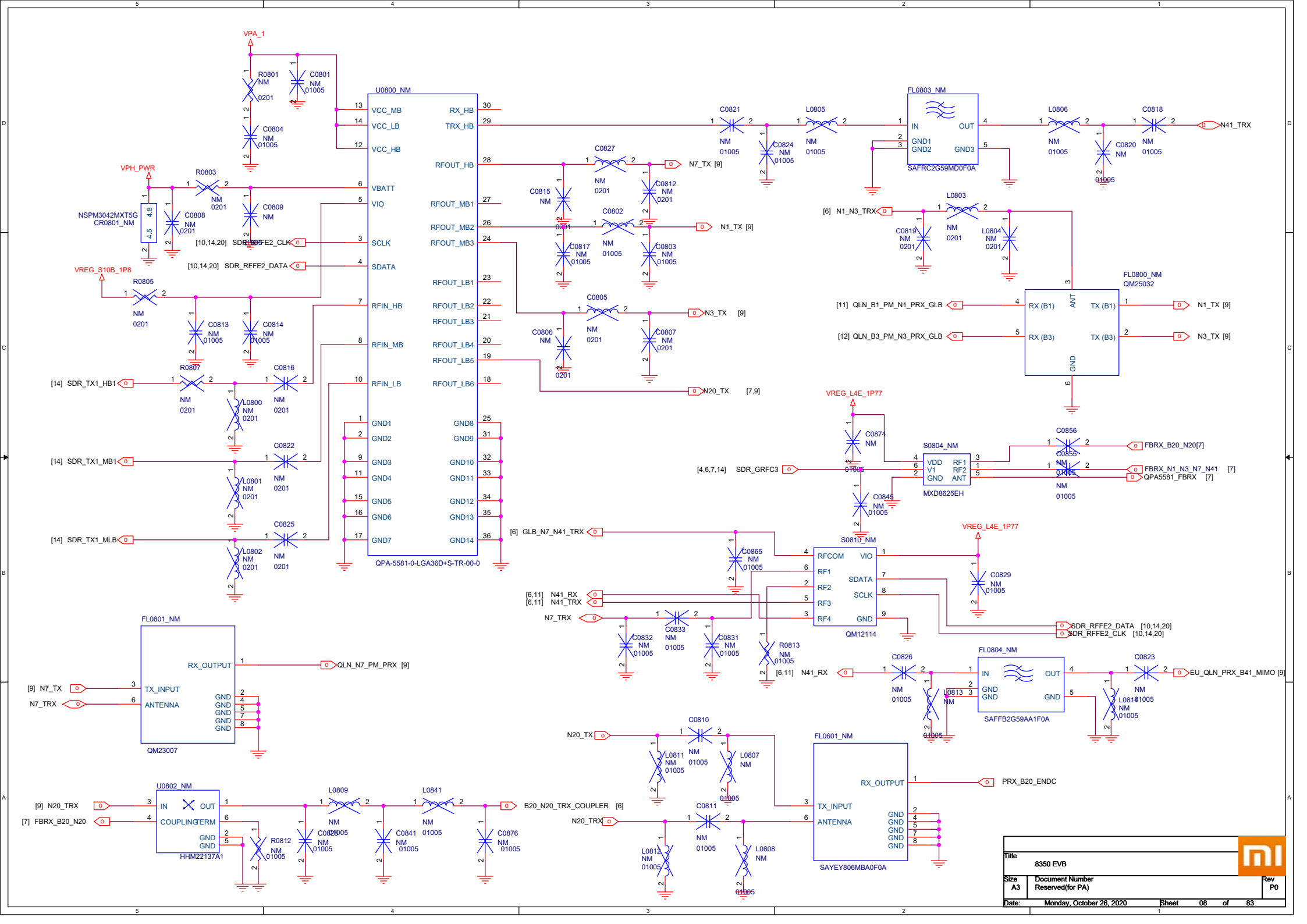
VPA_1
R0801 NM 0201
C0801 NM 01005
C0804 NM 01005
U0800_NM
VCC_MB
VCC_LB
VCC_HB
VBATT
VIO
SCLK
SDATA
RFIN_HB
RFIN_MB
RFIN_LB
GND1
GND2
GND3
GND4
GND5
GND6
GND7
RX_HB
TRX_HB
RFOUT_HB
RFOUT_MB1
RFOUT_MB2
RFOUT_MB3
RFOUT_LB1
RFOUT_LB2
RFOUT_LB3
RFOUT_LB4
RFOUT_LB5
RFOUT_LB6
GND8
GND9
GND10
GND11
GND12
GND13
GND14
QPA-5581-0-LGA36D+S-TR-00-0
VPH_PWR
R0803 NM 0201
C0808 NM 0201
C0809 NM
NSPM3042MXT5G
CR0801_NM
[10,14,20] SDR_RFFE2_CLK
[10,14,20] SDR_RFFE2_DATA
VREG_S10B_1P8
R0805 NM 0201
C0813 NM 01005
C0814 NM 01005
[14] SDR_TX1_HB1
R0807 NM 0201
L0800 NM 0201
C0816 NM 0201
[14] SDR_TX1_MB1
C0822 NM 0201
L0801 NM 0201
[14] SDR_TX1_MLB
C0825 NM 0201
L0802 NM 0201
C0827 NM 0201
C0812 NM 0201
N7_TX [9]
C0815 NM 0201
C0802 NM 01005
N1_TX [9]
C0817 NM 01005
C0803 NM 01005
C0805 NM 0201
N3_TX [9]
C0806 NM 0201
C0807 NM 0201
N20_TX [7,9]
C0821 NM 01005
L0805 NM 01005
C0824 NM 01005
FL0803_NM
IN
OUT
GND1
GND2
GND3
SAFRC2G59MD0F0A
L0806 NM 01005
C0820 NM 01005
C0818 NM 01005
N41_TRX
[6] N1_N3_TRX
L0803 NM 0201
C0819 NM 0201
L0804 NM 0201
FL0800_NM
QM25032
[11] QLN_B1_PM_N1_PRX_GLB
[12] QLN_B3_PM_N3_PRX_GLB
RX (B1)
RX (B3)
ANT
TX (B1)
TX (B3)
GND
N1_TX [9]
N3_TX [9]
VREG_L4E_1P77
C0874 NM 01005
[4,6,7,14] SDR_GRFC3
S0804_NM
VDD
V1
GND
RF1
RF2
ANT
MXD8625EH
C0845 NM 01005
C0856 NM 01005
C0855 NM 01005
FBRX_B20_N20[7]
FBRX_N1_N3_N7_N41 [7]
QPA5581_FBRX [7]
[6] GLB_N7_N41_TRX
C0865 NM 01005
S0810_NM
RFCOM
RF1
RF2
RF3
RF4
VIO
SDATA
SCLK
GND
QM12114
VREG_L4E_1P77
C0829 NM 01005
[6,11] N41_RX
[6,11] N41_TRX
N7_TRX
C0832 NM 01005
C0833 NM 01005
C0831 NM 01005
R0813 NM 01005
SDR_RFFE2_DATA [10,14,20]
SDR_RFFE2_CLK [10,14,20]
FL0801_NM
RX_OUTPUT
TX_INPUT
ANTENNA
GND
QM23007
QLN_N7_PM_PRX [9]
[9] N7_TX
N7_TRX
C0826 NM 01005
L0813 NM 01005
FL0804_NM
IN
OUT
GND
SAFFB2G59AA1F0A
C0823 NM 01005
L0814 NM 01005
EU_QLN_PRX_B41_MIMO [9]
N20_TX
C0810 NM 01005
L0811 NM 01005
L0807 NM 01005
FL0601_NM
RX_OUTPUT
TX_INPUT
ANTENNA
GND
SAYEY806MBA0F0A
PRX_B20_ENDC
U0802_NM
IN
OUT
COUPLING
TERM
GND
HHM22137A1
[9] N20_TRX
[7] FBRX_B20_N20
L0809 NM 01005
L0841 NM 01005
B20_N20_TRX_COUPLER [6]
R0812 NM 01005
C0840 NM 01005
C0841 NM 01005
C0876 NM 01005
N20_TRX
C0811 NM 01005
L0812 NM 01005
L0808 NM 01005
Title
8350 EVB
Size
A3
Document Number
Reserved(for PA)
Rev
P0
Date:
Monday, October 26, 2020
Sheet
08
of
83

DC FOR 4G

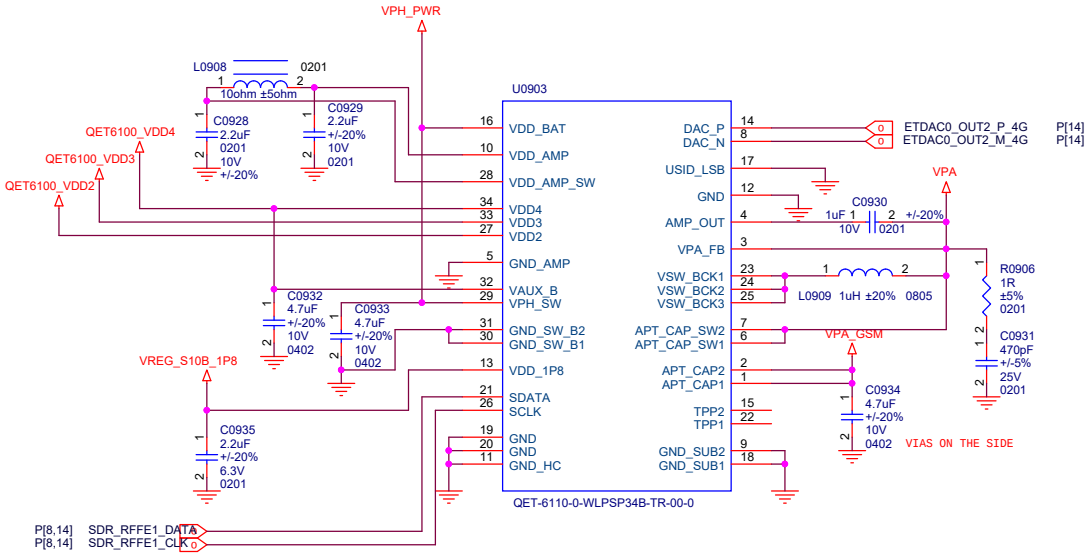

DC FOR QPA5581

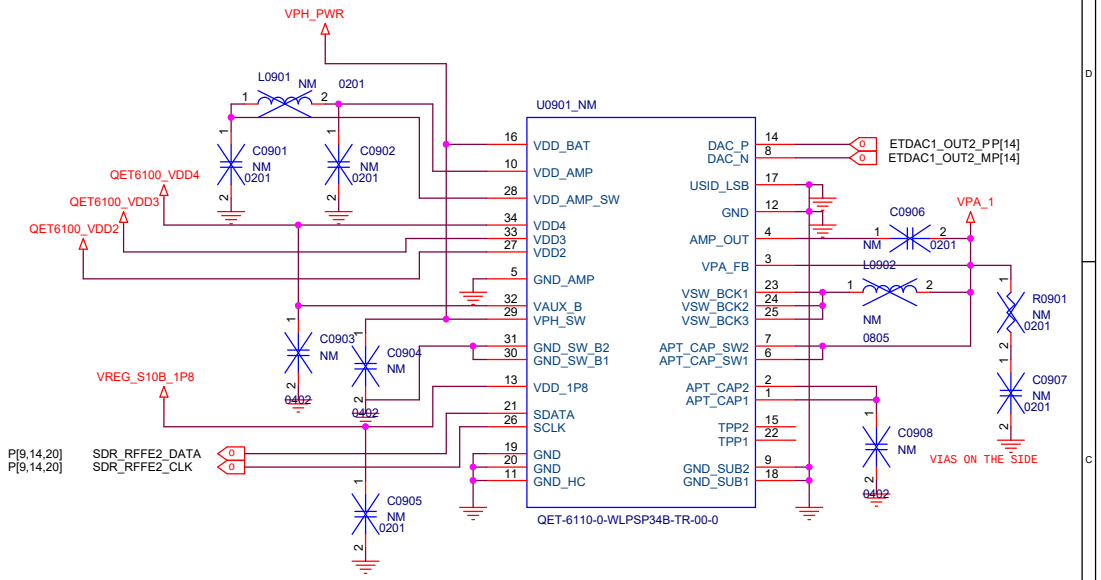

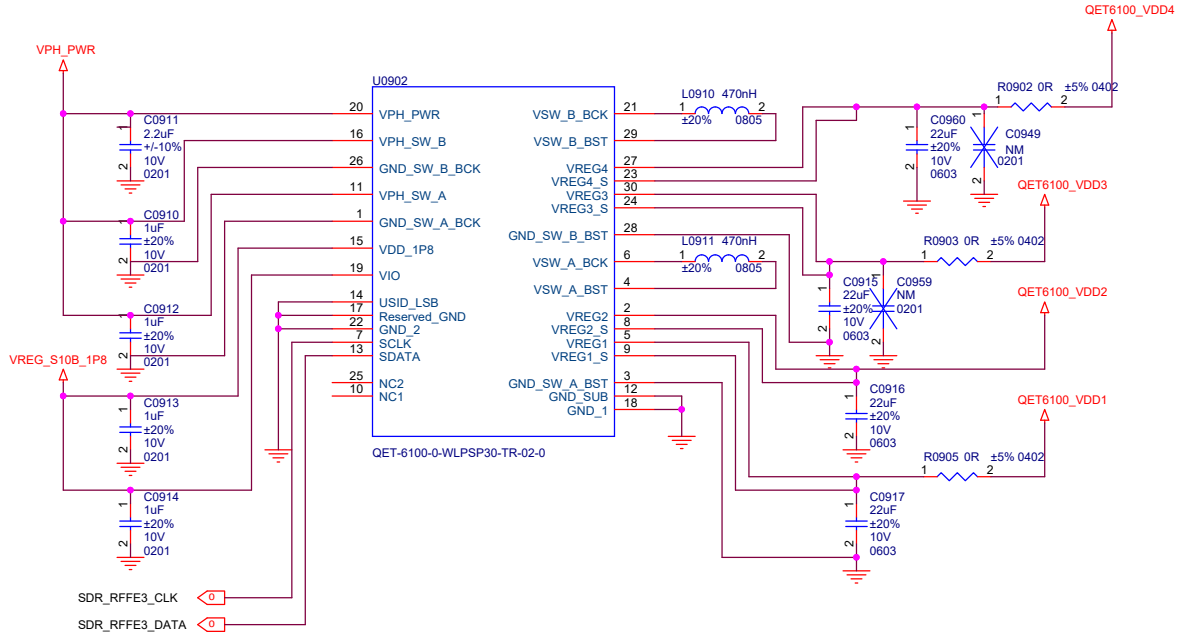

Title	8350 EVB	
Size A3	Document Number RF DC-DC	Rev P0
Date: Monday, October 26, 2020	Sheet 09 of 83	

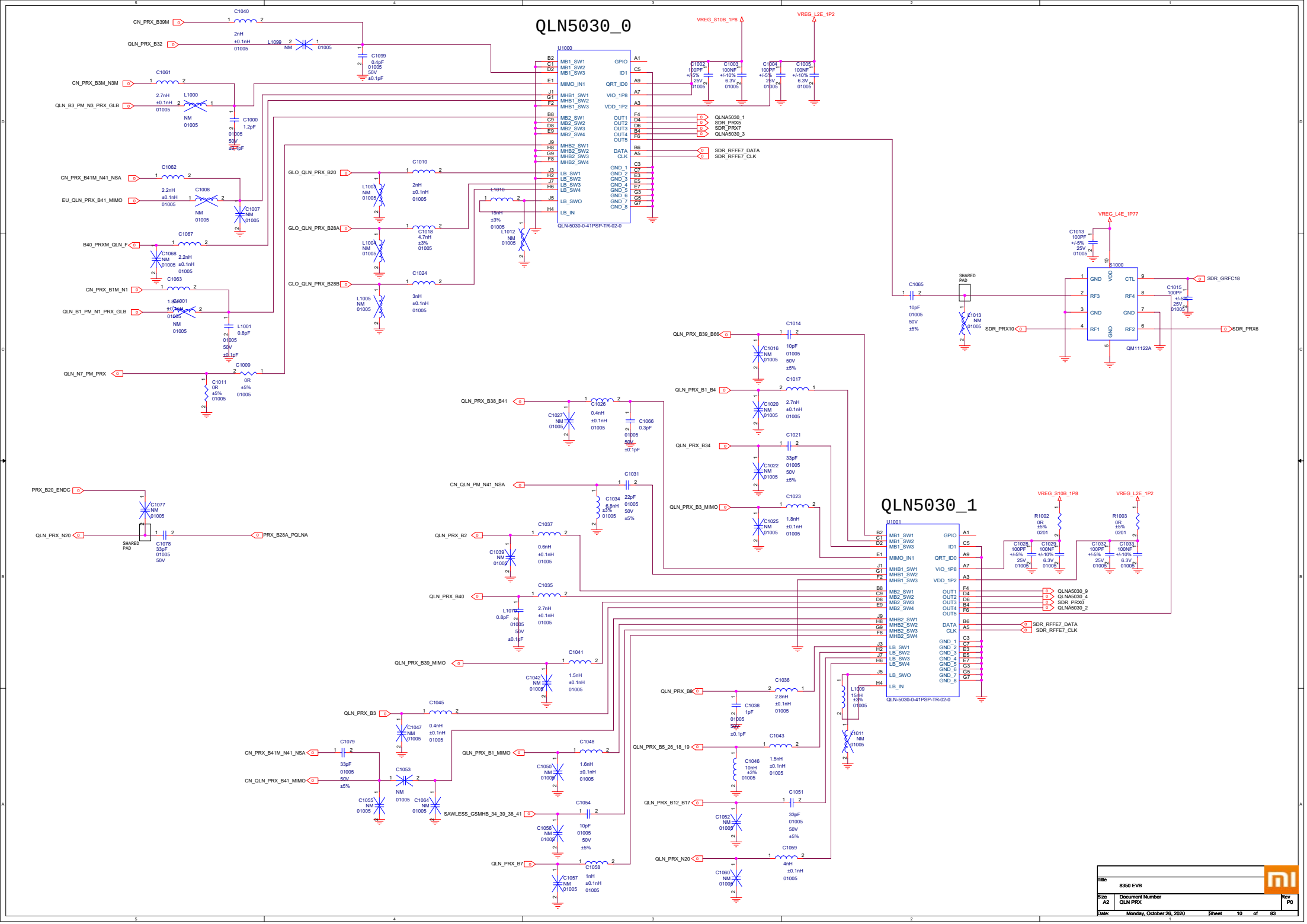
QLN5030_0
QLN5030_1
U1000
U1001
QLN-5030-0-41PSP-TR-02-0
VREG_S10B_1P8
VREG_L2E_1P2
VREG_L4E_1P77
CN_PRX_B39M
QLN_PRX_B32
CN_PRX_B3M_N3M
QLN_B3_PM_N3_PRX_GLB
CN_PRX_B41M_N41_NSA
EU_QLN_PRX_B41_MIMO
B40_PRXM_QLN_F
CN_PRX_B1M_N1
QLN_B1_PM_N1_PRX_GLB
QLN_N7_PM_PRX
GLO_QLN_PRX_B20
GLO_QLN_PRX_B28A
GLO_QLN_PRX_B28B
QLNA5030_1
SDR_PRX5
SDR_PRX7
QLNA5030_3
SDR_RFFE7_DATA
SDR_RFFE7_CLK
SDR_GRFC18
SDR_PRX10
SDR_PRX6
QM11122A
QLN_PRX_B39_B66
QLN_PRX_B1_B4
QLN_PRX_B38_B41
QLN_PRX_B34
QLN_PRX_B3_MIMO
CN_QLN_PM_N41_NSA
PRX_B20_ENDC
QLN_PRX_N20
PRX_B28A_PQLNA
QLN_PRX_B2
QLN_PRX_B40
QLN_PRX_B39_MIMO
QLN_PRX_B8
QLN_PRX_B3
QLN_PRX_B5_26_18_19
CN_PRX_B41M_N41_NSA
CN_QLN_PRX_B41_MIMO
QLN_PRX_B1_MIMO
QLN_PRX_B12_B17
SAWLESS_GSMHB_34_39_38_41
QLN_PRX_B7
QLN_PRX_N20
QLNA5030_9
QLNA5030_4
SDR_PRX0
QLNA5030_2
SDR_RFFE7_DATA
SDR_RFFE7_CLK
Title
8350 EVB
Size
A2
Document Number
QLN PRX
Rev
P0
Date:
Monday, October 26, 2020
Sheet
10
of
83

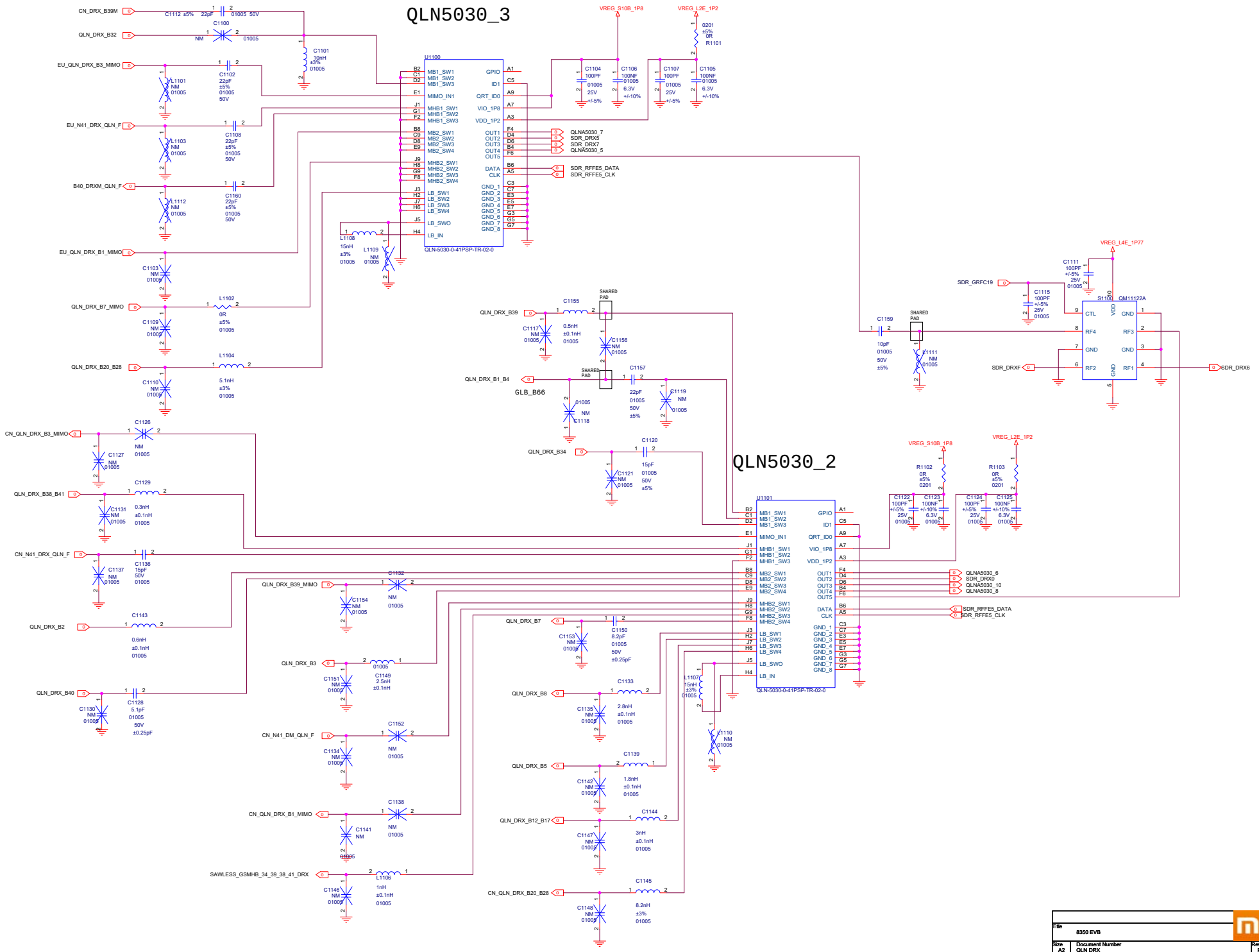
QLN5030_3
QLN5030_2
U1100
U1101
QLN-5030-0-41PSP-TR-02-0
VREG_S10B_1P8
VREG_L2E_1P2
VREG_L4E_1P77
S1100
QM11122A
CN_DRX_B39M
QLN_DRX_B32
EU_QLN_DRX_B3_MIMO
EU_N41_DRX_QLN_F
B40_DRXM_QLN_F
EU_QLN_DRX_B1_MIMO
QLN_DRX_B7_MIMO
QLN_DRX_B20_B28
CN_QLN_DRX_B3_MIMO
QLN_DRX_B38_B41
CN_N41_DRX_QLN_F
QLN_DRX_B2
QLN_DRX_B40
QLN_DRX_B39
QLN_DRX_B1_B4
GLB_B66
QLN_DRX_B34
QLN_DRX_B39_MIMO
QLN_DRX_B3
CN_N41_DM_QLN_F
CN_QLN_DRX_B1_MIMO
SAWLESS_GSMHB_34_39_38_41_DRX
QLN_DRX_B7
QLN_DRX_B8
QLN_DRX_B5
QLN_DRX_B12_B17
CN_QLN_DRX_B20_B28
SDR_GRFC19
SDR_DRXF
SDR_DRX6
QLNA5030_7
SDR_DRX5
SDR_DRX7
QLNA5030_5
SDR_RFFE5_DATA
SDR_RFFE5_CLK
QLNA5030_6
SDR_DRX0
QLNA5030_10
QLNA5030_8
SHARED PAD
Title
8350 EVB
Size
A2
Document Number
QLN DRX
Rev
P0
Date:
Monday, October 26, 2020
Sheet
11
of
83

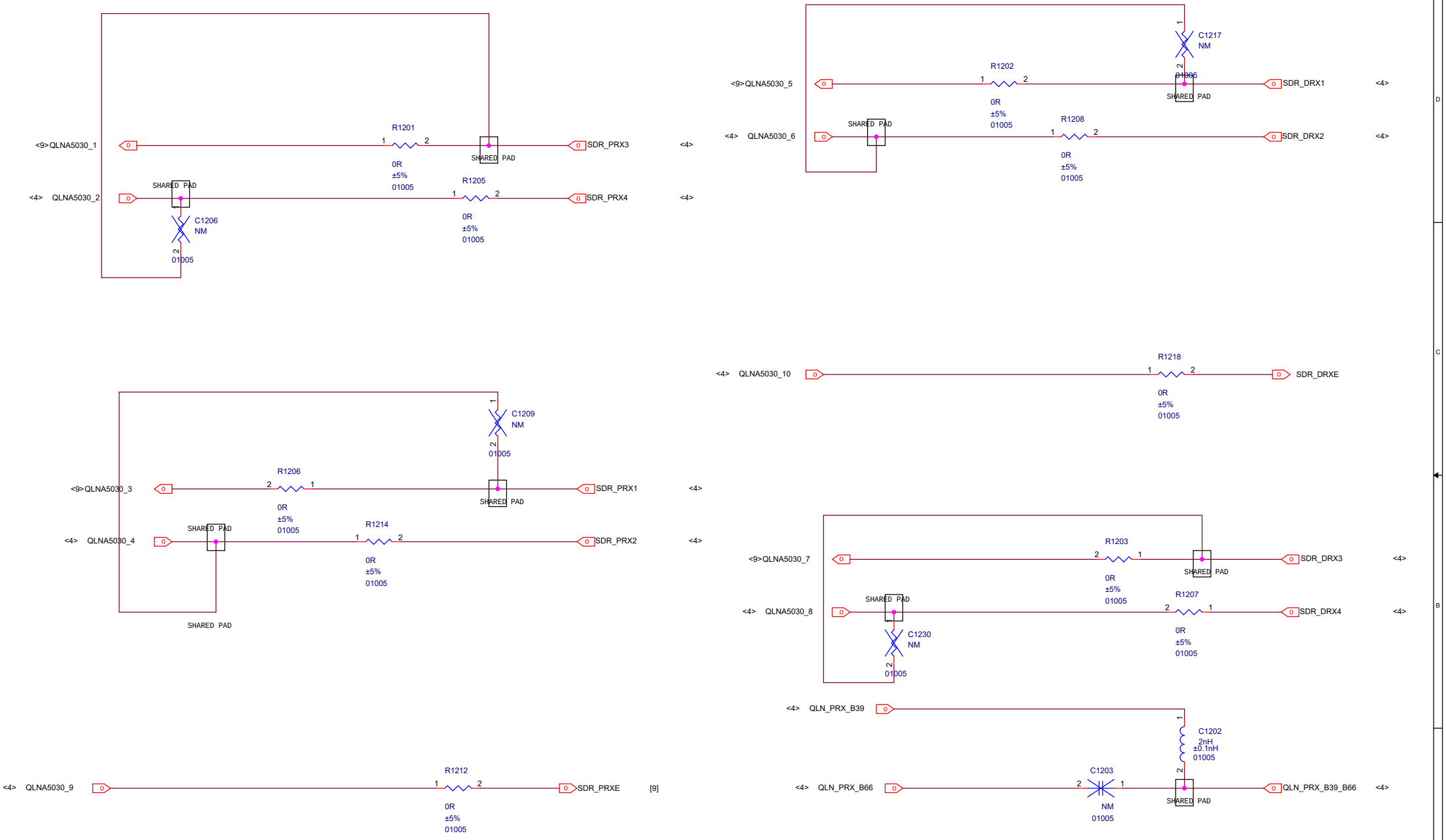

Title	8350 EVB	
Size A3	Document Number Reserved(for LNA)	Rev P0
Date: Monday, October 26, 2020	Sheet 12 of 83	

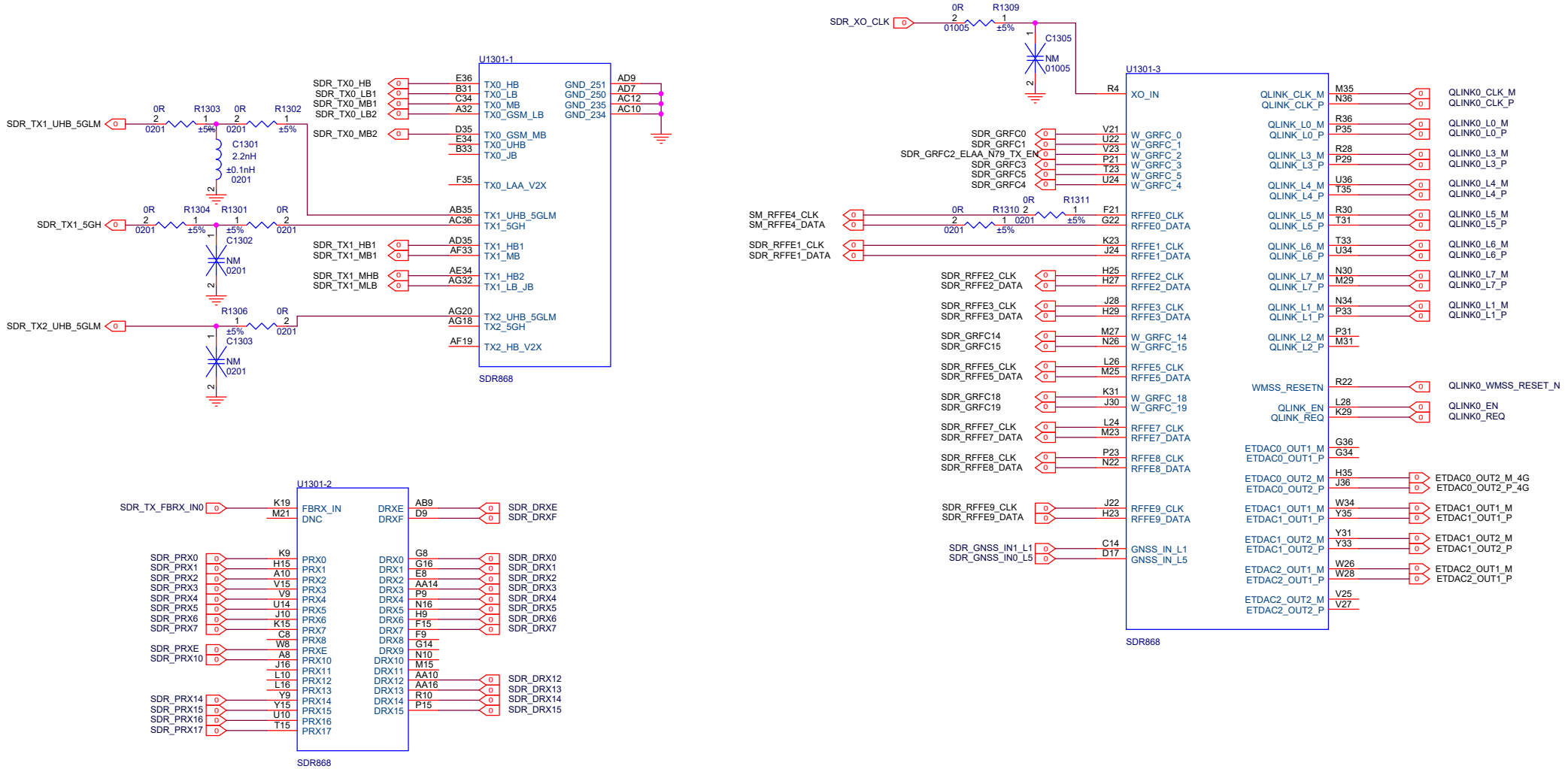

Title	8350 EVB		
Size A3	Document Number WTR Interface		Rev P0
Date: Monday, October 26, 2020		Sheet 13 of 83	

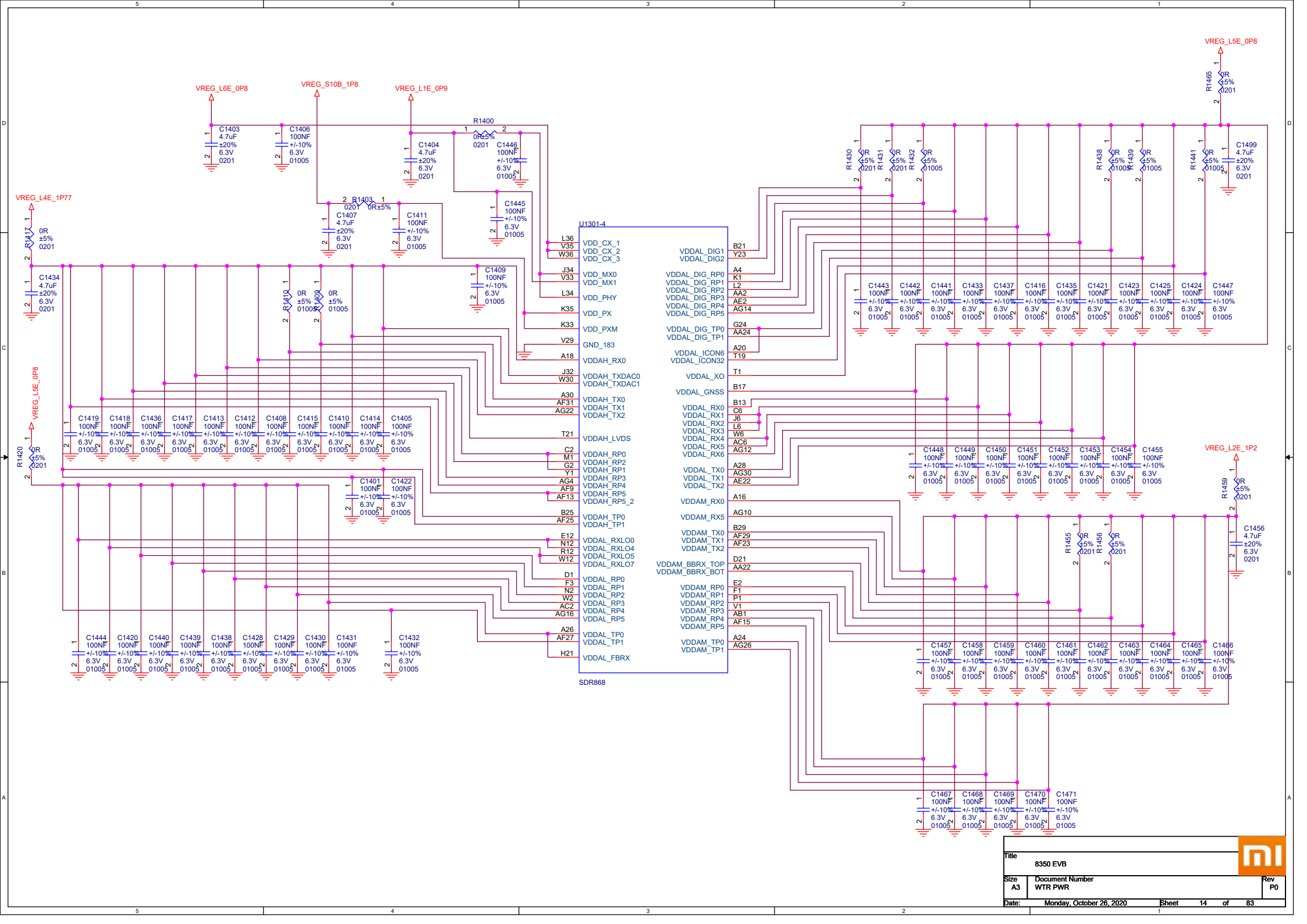
VREG_L6E_0P8
VREG_S10B_1P8
VREG_L1E_0P9
VREG_L5E_0P8
VREG_L4E_1P77
VREG_L5E_0P8
VREG_L2E_1P2
U1301-4
SDR868
VDD_CX_1
VDD_CX_2
VDD_CX_3
VDD_MX0
VDD_MX1
VDD_PHY
VDD_PX
VDD_PXM
GND_183
VDDAH_RX0
VDDAH_TXDAC0
VDDAH_TXDAC1
VDDAH_TX0
VDDAH_TX1
VDDAH_TX2
VDDAH_LVDS
VDDAH_RP0
VDDAH_RP2
VDDAH_RP1
VDDAH_RP3
VDDAH_RP4
VDDAH_RP5
VDDAH_RP5_2
VDDAH_TP0
VDDAH_TP1
VDDAL_RXLO0
VDDAL_RXLO4
VDDAL_RXLO5
VDDAL_RXLO7
VDDAL_RP0
VDDAL_RP1
VDDAL_RP2
VDDAL_RP3
VDDAL_RP4
VDDAL_RP5
VDDAL_TP0
VDDAL_TP1
VDDAL_FBRX
VDDAL_DIG1
VDDAL_DIG2
VDDAL_DIG_RP0
VDDAL_DIG_RP1
VDDAL_DIG_RP2
VDDAL_DIG_RP3
VDDAL_DIG_RP4
VDDAL_DIG_RP5
VDDAL_DIG_TP0
VDDAL_DIG_TP1
VDDAL_ICON6
VDDAL_ICON32
VDDAL_XO
VDDAL_GNSS
VDDAL_RX0
VDDAL_RX1
VDDAL_RX2
VDDAL_RX3
VDDAL_RX4
VDDAL_RX5
VDDAL_RX6
VDDAL_TX0
VDDAL_TX1
VDDAL_TX2
VDDAM_RX0
VDDAM_RX5
VDDAM_TX0
VDDAM_TX1
VDDAM_TX2
VDDAM_BBRX_TOP
VDDAM_BBRX_BOT
VDDAM_RP0
VDDAM_RP1
VDDAM_RP2
VDDAM_RP3
VDDAM_RP4
VDDAM_RP5
VDDAM_TP0
VDDAM_TP1
R1400 0R ±5% 0201
R1403 0R ±5% 0201
R1410 0R ±5% 01005
R1409 0R ±5% 01005
R1417 0R ±5% 0201
R1420 0R ±5% 0201
R1430 0R ±5% 0201
R1431 0R ±5% 0201
R1432 0R ±5% 01005
R1438 0R ±5% 01005
R1439 0R ±5% 01005
R1441 0R ±5% 01005
R1455 0R ±5% 0201
R1456 0R ±5% 0201
R1459 0R ±5% 0201
R1465 0R ±5% 0201
C1403 4.7uF ±20% 6.3V 0201
C1406 100NF +/-10% 6.3V 01005
C1404 4.7uF ±20% 6.3V 0201
C1446 100NF +/-10% 6.3V 01005
C1445 100NF +/-10% 6.3V 01005
C1407 4.7uF ±20% 6.3V 0201
C1411 100NF +/-10% 6.3V 01005
C1409 100NF +/-10% 6.3V 01005
C1434 4.7uF ±20% 6.3V 0201
C1499 4.7uF ±20% 6.3V 0201
C1456 4.7uF ±20% 6.3V 0201
C1419 100NF +/-10% 6.3V 01005
C1418 100NF +/-10% 6.3V 01005
C1436 100NF +/-10% 6.3V 01005
C1417 100NF +/-10% 6.3V 01005
C1413 100NF +/-10% 6.3V 01005
C1412 100NF +/-10% 6.3V 01005
C1408 100NF +/-10% 6.3V 01005
C1415 100NF +/-10% 6.3V 01005
C1410 100NF +/-10% 6.3V 01005
C1414 100NF +/-10% 6.3V 01005
C1405 100NF +/-10% 6.3V 01005
C1401 100NF +/-10% 6.3V 01005
C1422 100NF +/-10% 6.3V 01005
C1444 100NF +/-10% 6.3V 01005
C1420 100NF +/-10% 6.3V 01005
C1440 100NF +/-10% 6.3V 01005
C1439 100NF +/-10% 6.3V 01005
C1438 100NF +/-10% 6.3V 01005
C1428 100NF +/-10% 6.3V 01005
C1429 100NF +/-10% 6.3V 01005
C1430 100NF +/-10% 6.3V 01005
C1431 100NF +/-10% 6.3V 01005
C1432 100NF +/-10% 6.3V 01005
C1443 100NF +/-10% 6.3V 01005
C1442 100NF +/-10% 6.3V 01005
C1441 100NF +/-10% 6.3V 01005
C1433 100NF +/-10% 6.3V 01005
C1437 100NF +/-10% 6.3V 01005
C1416 100NF +/-10% 6.3V 01005
C1435 100NF +/-10% 6.3V 01005
C1421 100NF +/-10% 6.3V 01005
C1423 100NF +/-10% 6.3V 01005
C1425 100NF +/-10% 6.3V 01005
C1424 100NF +/-10% 6.3V 01005
C1447 100NF +/-10% 6.3V 01005
C1448 100NF +/-10% 6.3V 01005
C1449 100NF +/-10% 6.3V 01005
C1450 100NF +/-10% 6.3V 01005
C1451 100NF +/-10% 6.3V 01005
C1452 100NF +/-10% 6.3V 01005
C1453 100NF +/-10% 6.3V 01005
C1454 100NF +/-10% 6.3V 01005
C1455 100NF +/-10% 6.3V 01005
C1457 100NF +/-10% 6.3V 01005
C1458 100NF +/-10% 6.3V 01005
C1459 100NF +/-10% 6.3V 01005
C1460 100NF +/-10% 6.3V 01005
C1461 100NF +/-10% 6.3V 01005
C1462 100NF +/-10% 6.3V 01005
C1463 100NF +/-10% 6.3V 01005
C1464 100NF +/-10% 6.3V 01005
C1465 100NF +/-10% 6.3V 01005
C1466 100NF +/-10% 6.3V 01005
C1467 100NF +/-10% 6.3V 01005
C1468 100NF +/-10% 6.3V 01005
C1469 100NF +/-10% 6.3V 01005
C1470 100NF +/-10% 6.3V 01005
C1471 100NF +/-10% 6.3V 01005
Title
8350 EVB
Size A3
Document Number WTR PWR
Rev P0
Date: Monday, October 26, 2020
Sheet 14 of 83

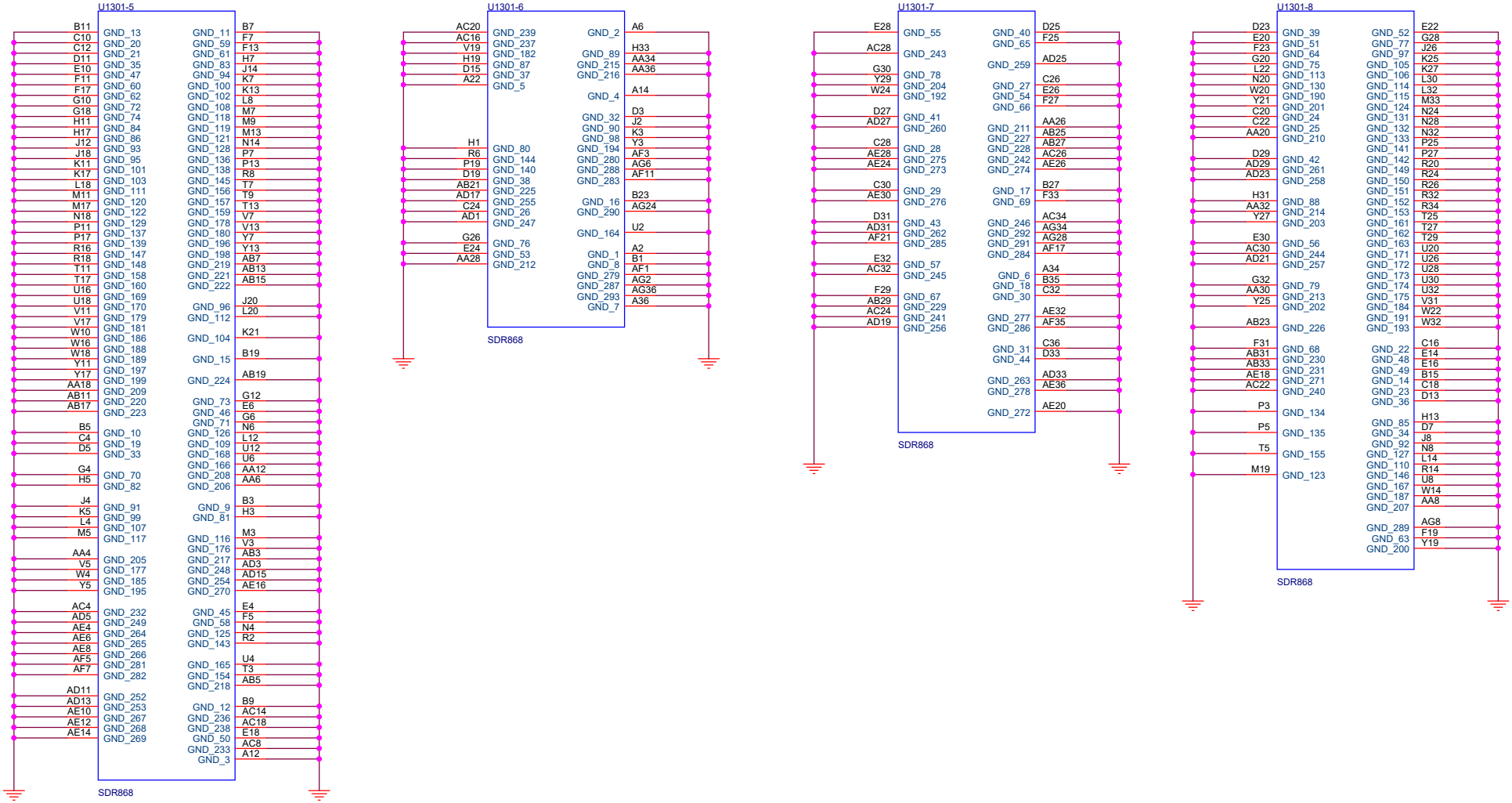

Title	8350 EVB		
Size A3	Document Number Reserved(for WTR)		Rev P0
Date: Monday, October 26, 2020		Sheet 15 of 83	

Title	8350 EVB	
Size A3	Document Number Reserved(for 5G-sub 6G)	Rev P0
Date: Monday, October 26, 2020	Sheet 16 of 83	

Title	8350 EVB	
Size A3	Document Number Reserved(for MM Wave)	Rev P0
Date: Monday, October 26, 2020	Sheet 17 of 83	

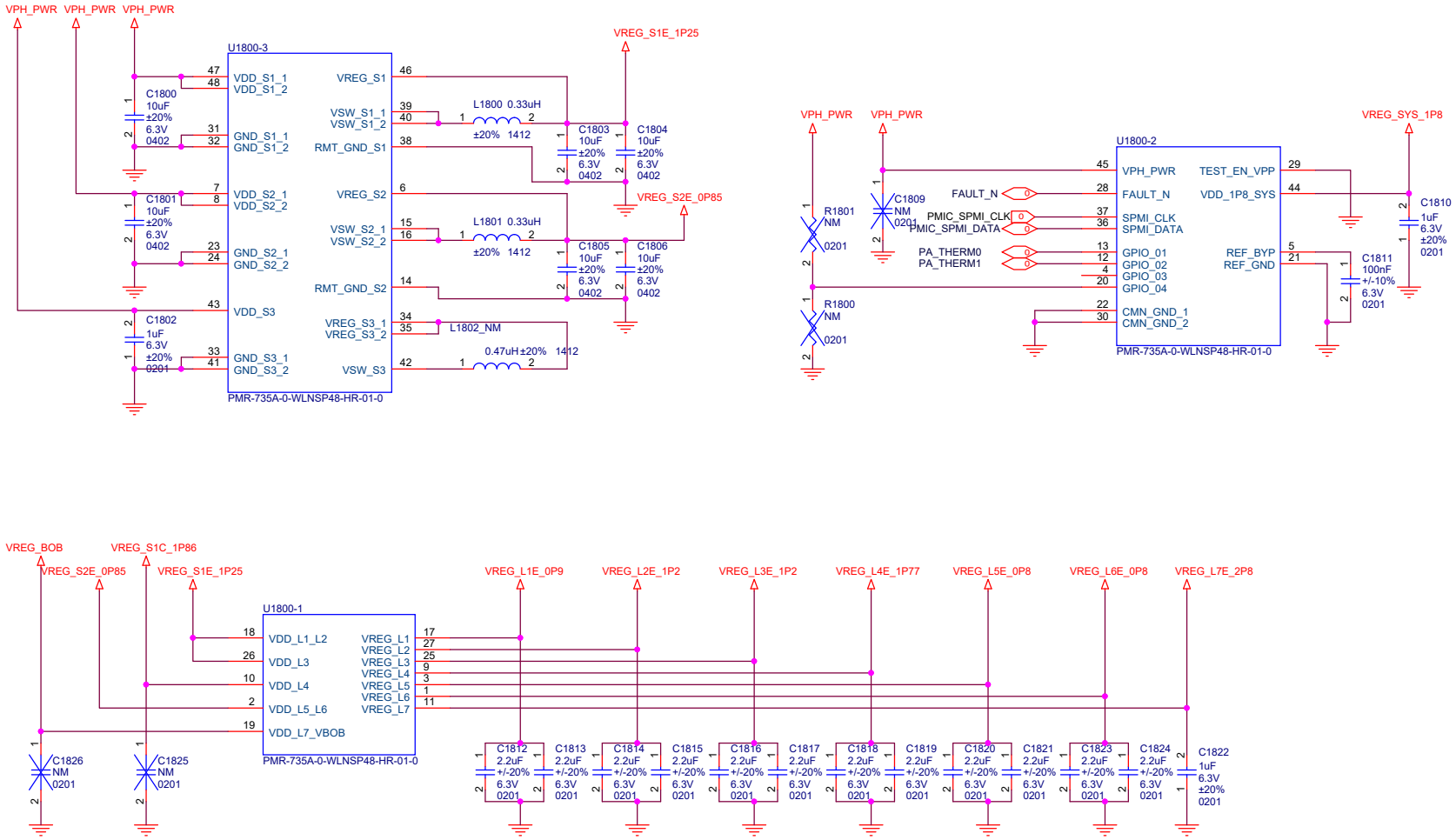

Title	8350 EVB	
Size A3	Document Number Reserved(for 5G-WTR I)	Rev P0
Date: Monday, October 26, 2020	Sheet 18 of 83	

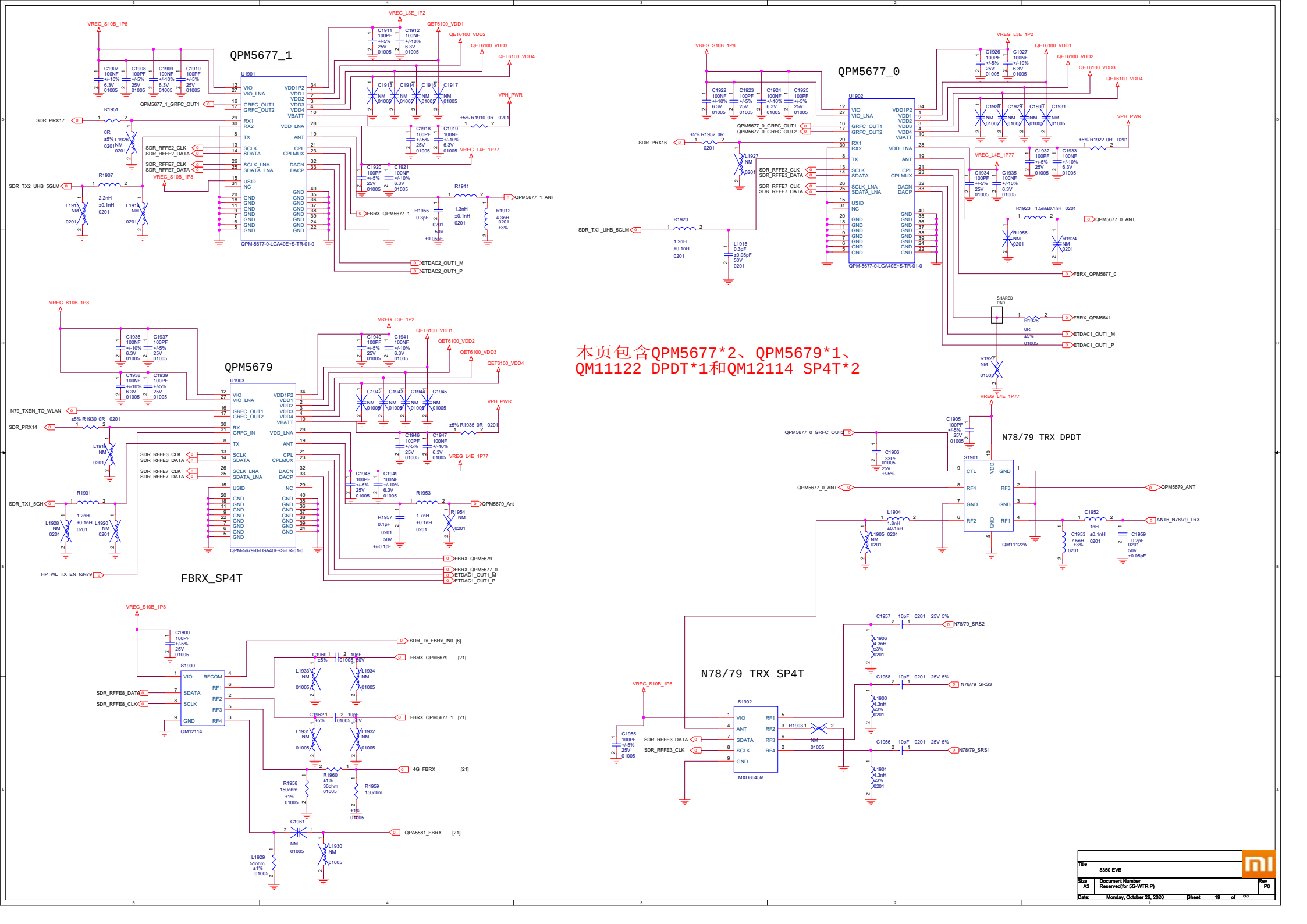
QPM5677_1
QPM5677_0
QPM5679
FBRX_SP4T
N78/79 TRX DPDT
N78/79 TRX SP4T
本页包含QPM5677*2、QPM5679*1、QM11122 DPDT*1和QM12114 SP4T*2
Title
8350 EVB
Size
A2
Document Number
Reserved(for 5G-WTR P)
Rev
P0
Date:
Monday, October 26, 2020
Sheet
19
of
63

本页包含QDM5579*3和旁边的DPDT*2

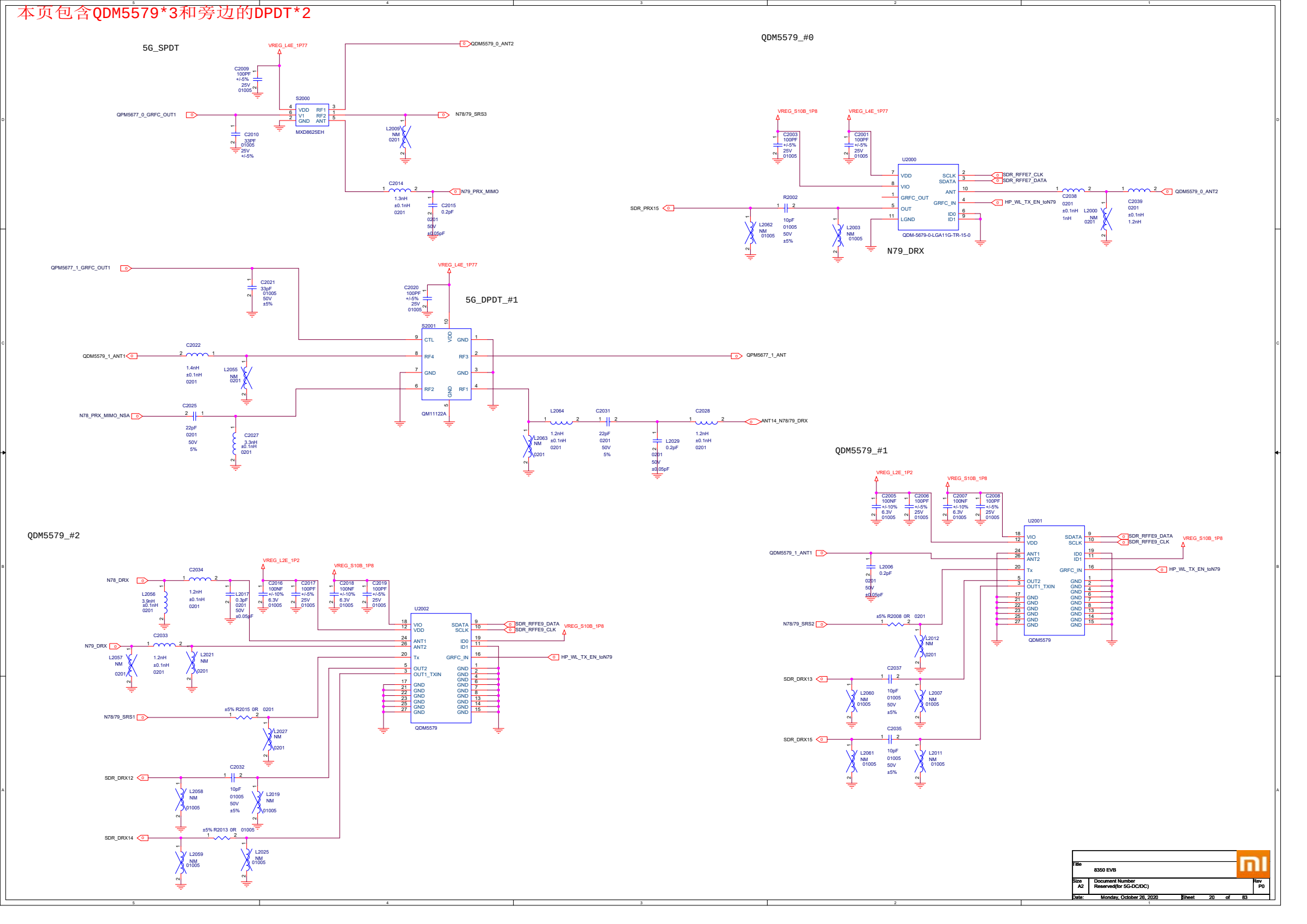

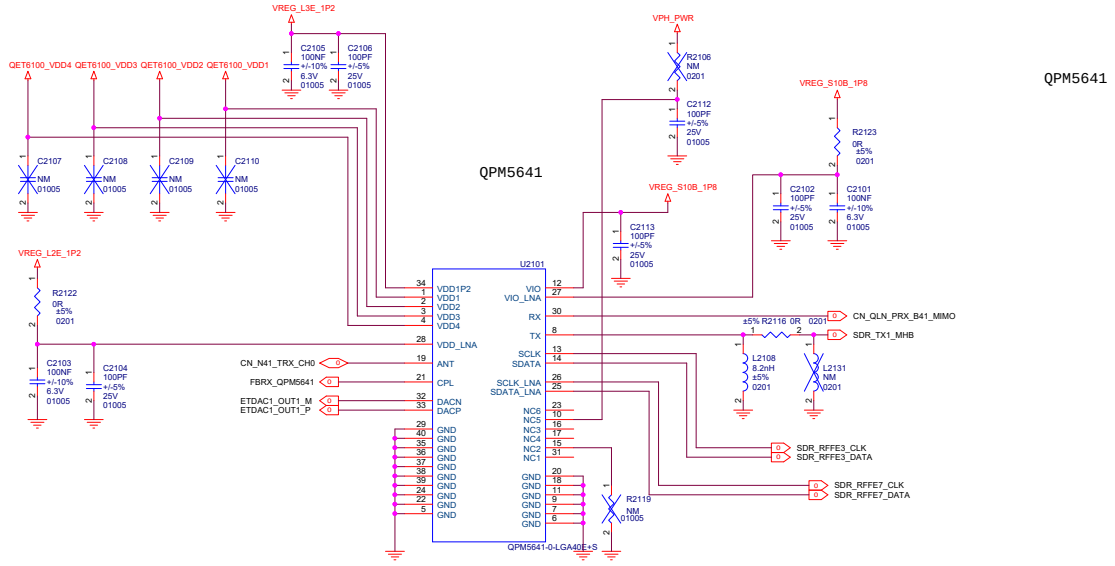

QPM5641

本页包含QPM5641到Ant4的网络，并兼容QPM6585

3P3T_1，IN口
为临近天线端

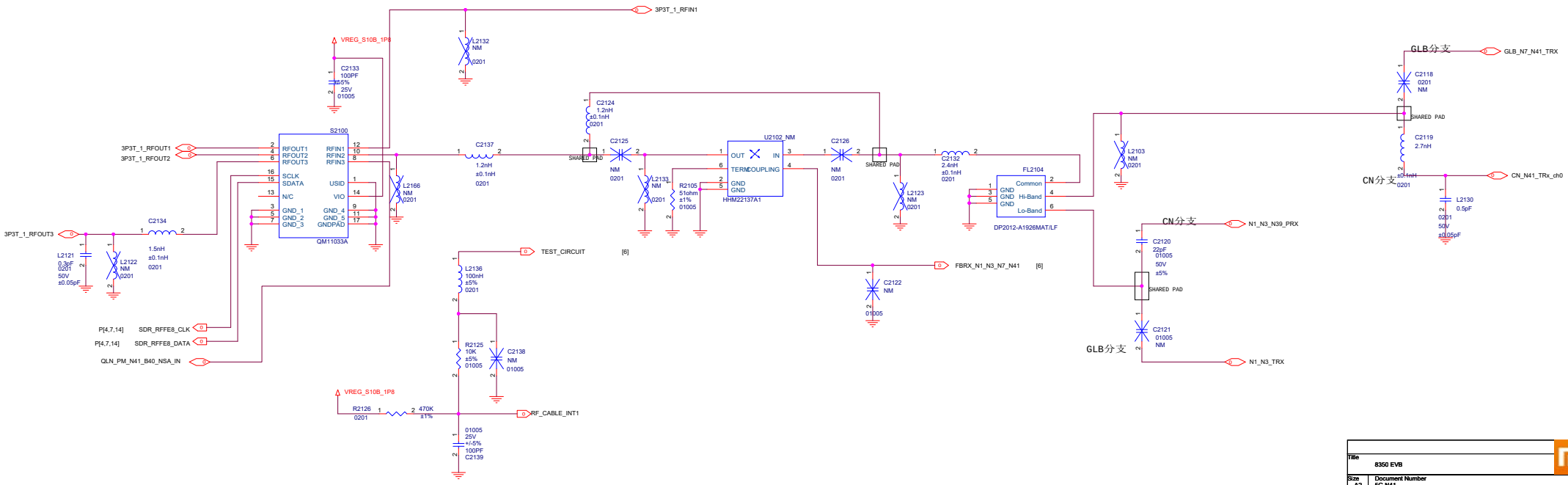

Title	8350 EVB		
Size A2	Document Number 5G N41		Rev P0
Date: Monday, October 26, 2020	Sheet 21 of 83		

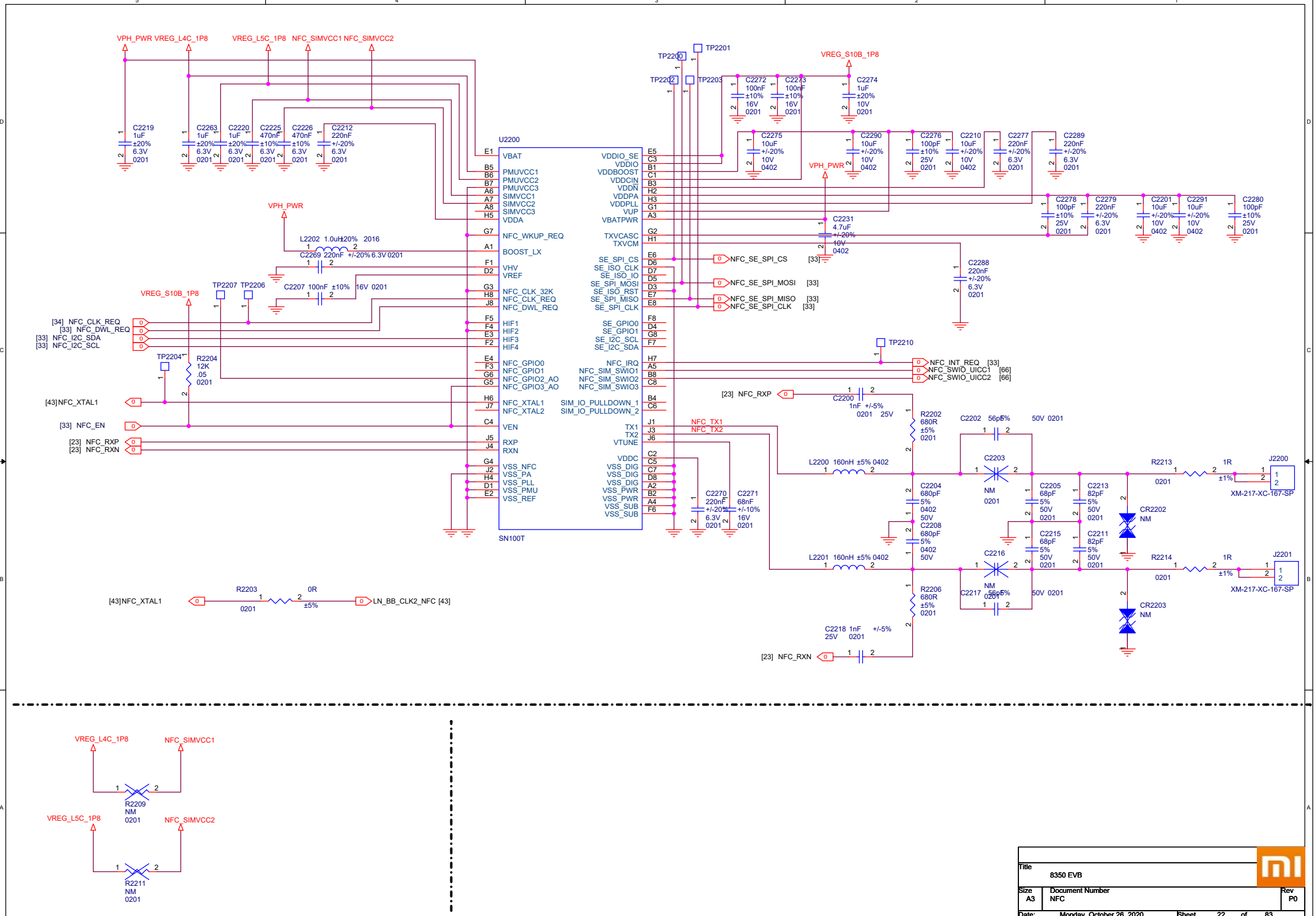

Title	8350 EVB	
Size A3	Document Number NFC	Rev P0
Date: Monday, October 26, 2020	Sheet 22 of 83	

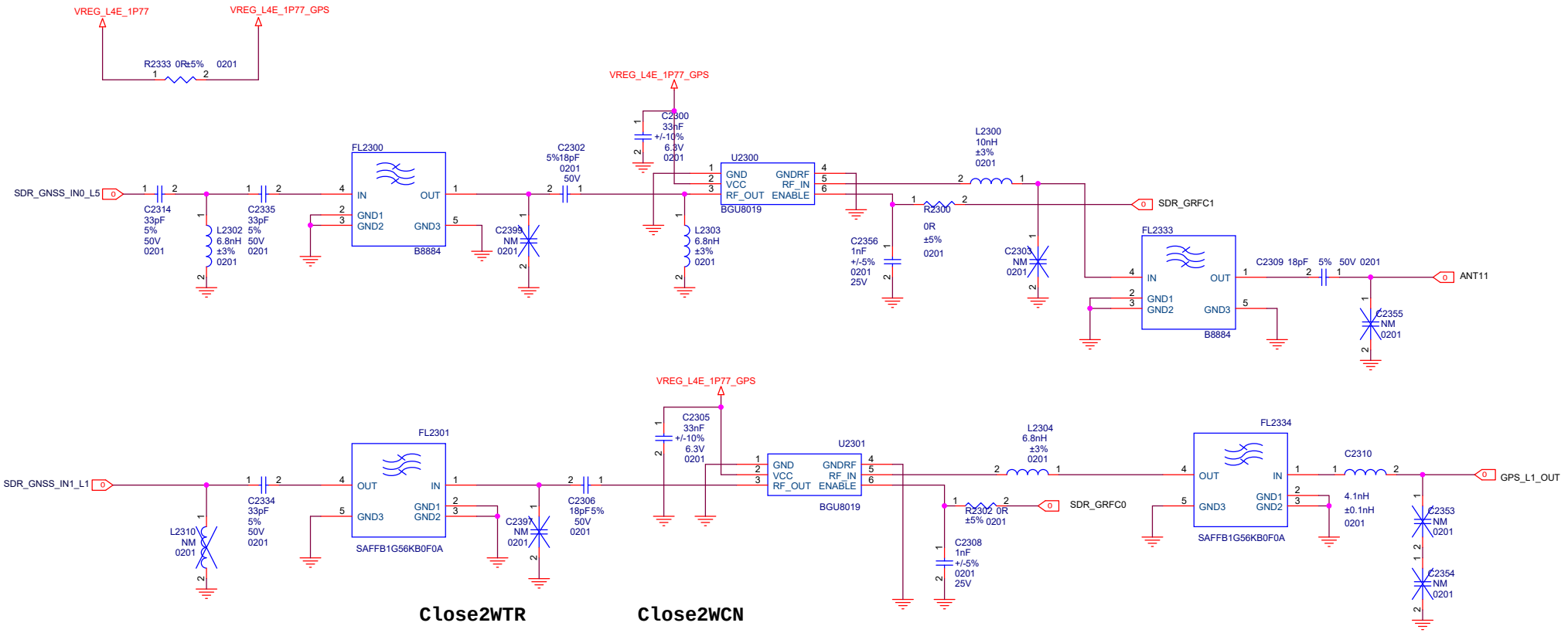

Title	8350 EVB	
Size A3	Document Number GPS	Rev P0
Date: Monday, October 26, 2020	Sheet 23 of 83	

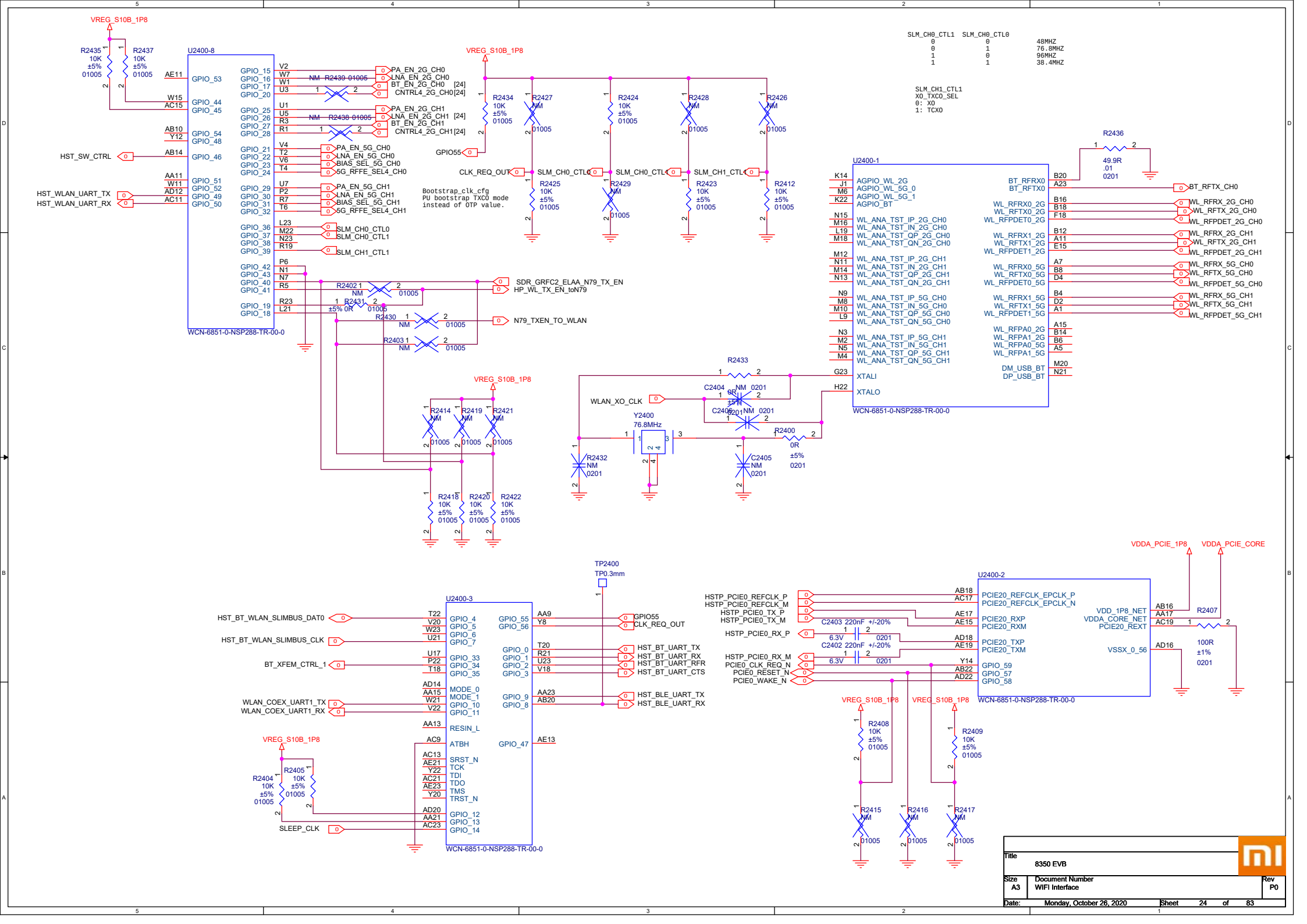
VREG_S10B_1P8
R2435 10K ±5% 01005
R2437 10K ±5% 01005
U2400-8
WCN-6851-0-NSP288-TR-00-0
HST_SW_CTRL
HST_WLAN_UART_TX
HST_WLAN_UART_RX
PA_EN_2G_CH0
LNA_EN_2G_CH0
BT_EN_2G_CH0 [24]
CNTRL4_2G_CH0[24]
PA_EN_2G_CH1
LNA_EN_2G_CH1 [24]
BT_EN_2G_CH1
CNTRL4_2G_CH1[24]
PA_EN_5G_CH0
LNA_EN_5G_CH0
BIAS_SEL_5G_CH0
5G_RFFE_SEL4_CH0
PA_EN_5G_CH1
LNA_EN_5G_CH1
BIAS_SEL_5G_CH1
5G_RFFE_SEL4_CH1
SLM_CH0_CTL0
SLM_CH0_CTL1
SLM_CH1_CTL1
GPIO55
CLK_REQ_OUT
Bootstrap_clk_cfg
PU bootstrap TXCO mode
instead of OTP value.
SDR_GRFC2_ELAA_N79_TX_EN
HP_WL_TX_EN_toN79
N79_TXEN_TO_WLAN
SLM_CH0_CTL0 SLM_CH0_CTL0
0 0 48MHZ
0 1 76.8MHZ
1 0 96MHZ
1 1 38.4MHZ
SLM_CH1_CTL1
XO_TXCO_SEL
0: XO
1: TCXO
U2400-1
WCN-6851-0-NSP288-TR-00-0
R2436 49.9R .01 0201
BT_RFTX_CH0
WL_RFTX_2G_CH0
WL_RFPDET_2G_CH0
WL_RFTX_2G_CH1
WL_RFPDET_2G_CH1
WL_RFTX_5G_CH0
WL_RFPDET_5G_CH0
WL_RFTX_5G_CH1
WL_RFPDET_5G_CH1
WLAN_XO_CLK
Y2400 76.8MHz
R2433
R2400 0R ±5% 0201
C2404 NM 0201
C2406 NM 0201
C2405 NM 0201
R2432 NM 0201
U2400-3
WCN-6851-0-NSP288-TR-00-0
TP2400 TP0.3mm
HST_BT_WLAN_SLIMBUS_DAT0
HST_BT_WLAN_SLIMBUS_CLK
BT_XFEM_CTRL_1
WLAN_COEX_UART1_TX
WLAN_COEX_UART1_RX
HST_BT_UART_TX
HST_BT_UART_RX
HST_BT_UART_RFR
HST_BT_UART_CTS
HST_BLE_UART_TX
HST_BLE_UART_RX
SLEEP_CLK
R2404 10K ±5% 01005
R2405 10K ±5% 01005
U2400-2
WCN-6851-0-NSP288-TR-00-0
VDDA_PCIE_1P8
VDDA_PCIE_CORE
HSTP_PCIE0_REFCLK_P
HSTP_PCIE0_REFCLK_M
HSTP_PCIE0_TX_P
HSTP_PCIE0_TX_M
HSTP_PCIE0_RX_P
HSTP_PCIE0_RX_M
PCIE0_CLK_REQ_N
PCIE0_RESET_N
PCIE0_WAKE_N
C2403 220nF +/-20% 6.3V 0201
C2402 220nF +/-20% 6.3V 0201
R2407 100R ±1% 0201
R2408 10K ±5% 01005
R2409 10K ±5% 01005
R2415 NM 01005
R2416 NM 01005
R2417 NM 01005
Title 8350 EVB
Size A3
Document Number WIFI Interface
Rev P0
Date: Monday, October 26, 2020
Sheet 24 of 83

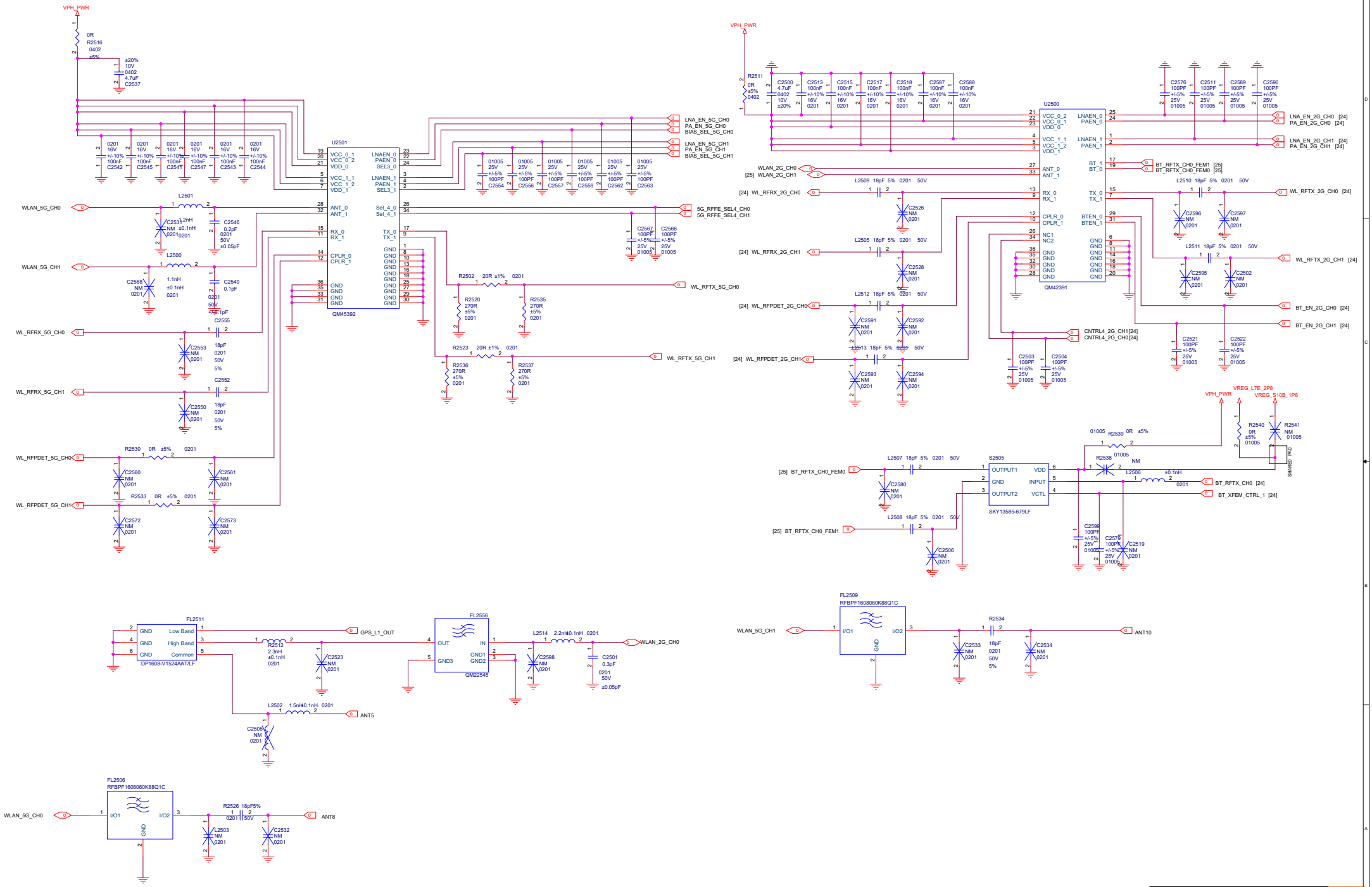
VPH_PWR
R2516 0R 0402 ±5%
C2537 4.7uF 0402 16V ±20%
U2501
QM45392
VCC_0_1
VCC_0_2
VDD_0
VCC_1_1
VCC_1_2
VDD_1
LNAEN_0
PAEN_0
SEL3_0
LNAEN_1
PAEN_1
SEL3_1
ANT_0
ANT_1
RX_0
RX_1
CPLR_0
CPLR_1
Sel_4_0
Sel_4_1
TX_0
TX_1
GND
LNA_EN_5G_CH0
PA_EN_5G_CH0
BIAS_SEL_5G_CH0
LNA_EN_5G_CH1
PA_EN_5G_CH1
BIAS_SEL_5G_CH1
5G_RFFE_SEL4_CH0
5G_RFFE_SEL4_CH1
WLAN_5G_CH0
WLAN_5G_CH1
WL_RFRX_5G_CH0
WL_RFRX_5G_CH1
WL_RFPDET_5G_CH0
WL_RFPDET_5G_CH1
WL_RFTX_5G_CH0
WL_RFTX_5G_CH1
L2501 1.2nH ±0.1nH 0201
L2500 1.1nH ±0.1nH 0201
C2546 0.2pF 0201 50V ±0.05pF
C2549 0.1pF 0201 50V ±0.1pF
C2555 18pF 0201 50V 5%
C2552 18pF 0201 50V 5%
R2530 0R ±5% 0201
R2533 0R ±5% 0201
R2502 20R ±1% 0201
R2523 20R ±1% 0201
R2520 270R ±5% 0201
R2535 270R ±5% 0201
R2536 270R ±5% 0201
R2537 270R ±5% 0201
U2500
QM42391
VCC_0_2
VCC_0_1
VDD_0
VCC_1_1
VCC_1_2
VDD_1
LNAEN_0
PAEN_0
LNAEN_1
PAEN_1
ANT_0
ANT_1
RX_0
RX_1
CPLR_0
CPLR_1
NC1
NC2
BT_1
BT_0
TX_0
TX_1
BTEN_0
BTEN_1
GND
LNA_EN_2G_CH0 [24]
PA_EN_2G_CH0 [24]
LNA_EN_2G_CH1 [24]
PA_EN_2G_CH1 [24]
BT_RFTX_CH0_FEM1 [25]
BT_RFTX_CH0_FEM0 [25]
WLAN_2G_CH0
[25] WLAN_2G_CH1
[24] WL_RFRX_2G_CH0
[24] WL_RFRX_2G_CH1
[24] WL_RFPDET_2G_CH0
[24] WL_RFPDET_2G_CH1
WL_RFTX_2G_CH0 [24]
WL_RFTX_2G_CH1 [24]
BT_EN_2G_CH0 [24]
BT_EN_2G_CH1 [24]
CNTRL4_2G_CH1[24]
CNTRL4_2G_CH0[24]
L2509 18pF 5% 0201 50V
L2505 18pF 5% 0201 50V
L2512 18pF 5% 0201 50V
L2513 18pF 5% 0201 50V
L2510 18pF 5% 0201 50V
L2511 18pF 5% 0201 50V
VREG_L7E_2P8
VREG_S10B_1P8
R2540 0R ±5% 01005
R2541 NM 01005
R2539 0R ±5% 01005
R2538 NM 01005
SHARED PAD
S2505
SKY13585-679LF
OUTPUT1
GND
OUTPUT2
VDD
INPUT
VCTL
L2507 18pF 5% 0201 50V
L2508 18pF 5% 0201 50V
L2506 ±0.1nH 0201
[25] BT_RFTX_CH0_FEM0
[25] BT_RFTX_CH0_FEM1
BT_RFTX_CH0 [24]
BT_XFEM_CTRL_1 [24]
FL2511
DP1608-V1524AAT/LF
Low Band
High Band
Common
GPS_L1_OUT
R2512 2.3nH ±0.1nH 0201
L2502 1.5nH ±0.1nH 0201
ANT5
FL2556
QM22545
OUT
IN
GND3
GND1
GND2
L2514 2.2nH ±0.1nH 0201
WLAN_2G_CH0
FL2509
RFBPF1608060K88Q1C
WLAN_5G_CH1
I/O1
I/O2
R2534 18pF 0201 50V 5%
ANT10
FL2506
RFBPF1608060K88Q1C
WLAN_5G_CH0
R2526 18pF 5% 0201 50V
ANT8
Title
8350 EVB
Size
A2
Document Number
WIFI FEM
Rev
P0
Date:
Monday, October 26, 2020
Sheet
25
of
83

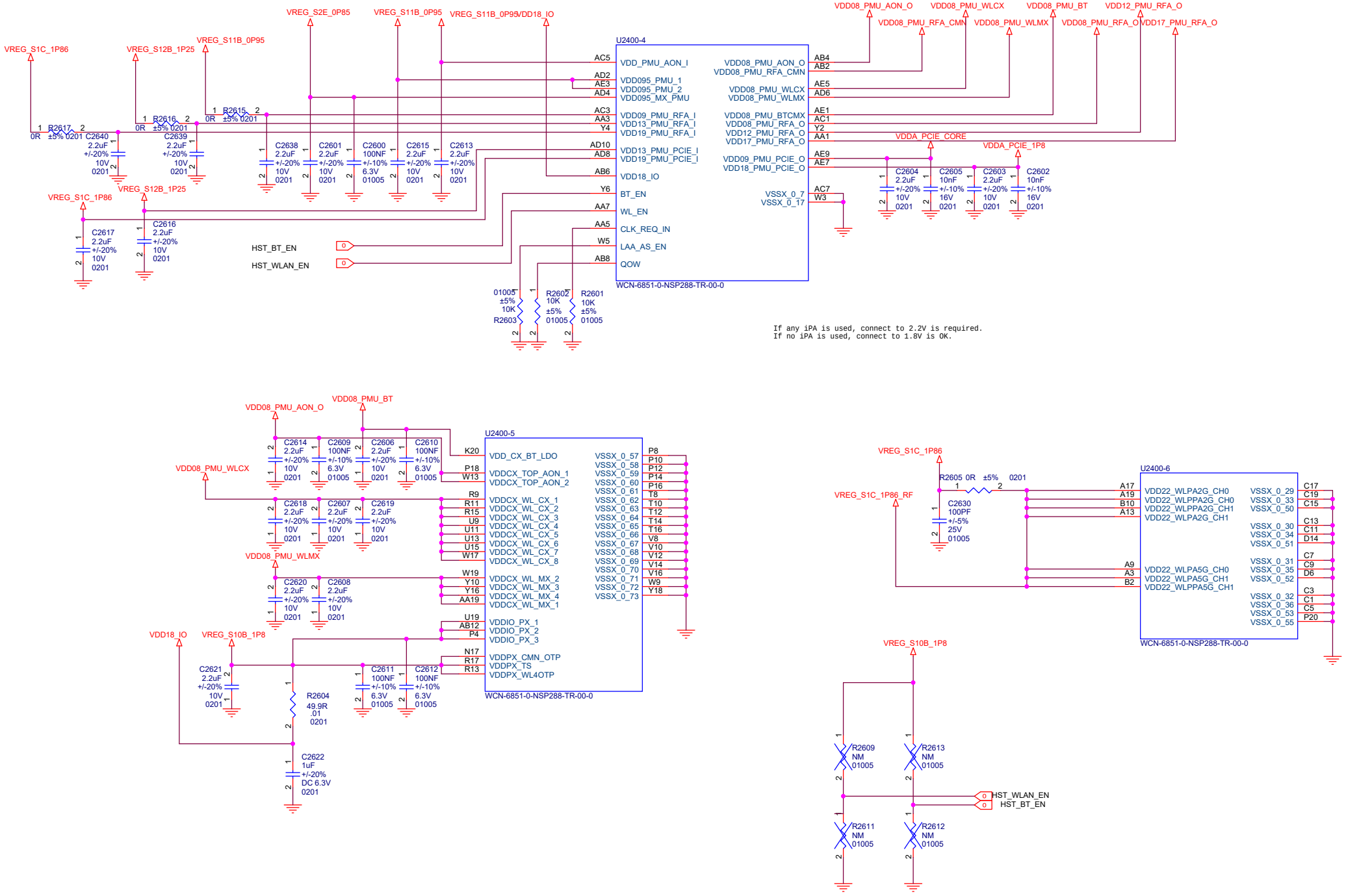

Title	8350 EVB	
Size A3	Document Number WIFI Decouping1	Rev P0
Date: Monday, October 26, 2020	Sheet 26 of 83	

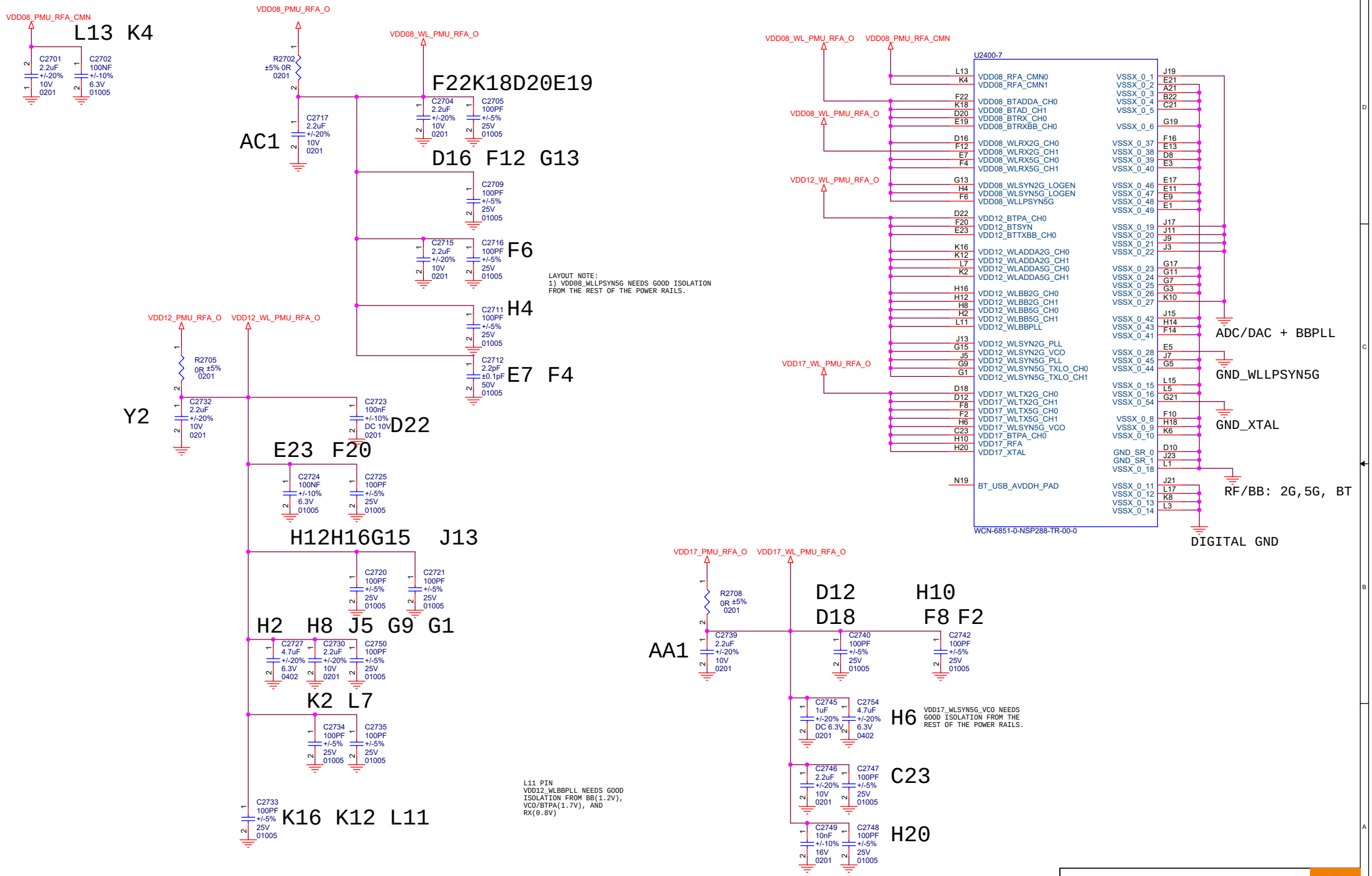

Title	8350 EVB	
Size A3	Document Number WIFI Decouping2	Rev P0
Date: Monday, October 26, 2020	Sheet 27 of 83	

Title	8350 EVB
Size A3	Document Number Reserved(for 11ad/11ax)
Rev	P0
Date:	Monday, October 26, 2020
Sheet	28 of 83

Title	8350 EVB	
Size A3	Document Number Reserved(for Digital FM)	Rev P0
Date: Monday, October 26, 2020	Sheet 29 of 83	

Title	8350 EVB		
Size A3	Document Number Reserved(for Analog FM)		Rev P0
Date: Monday, October 26, 2020	Sheet 30 of 83		

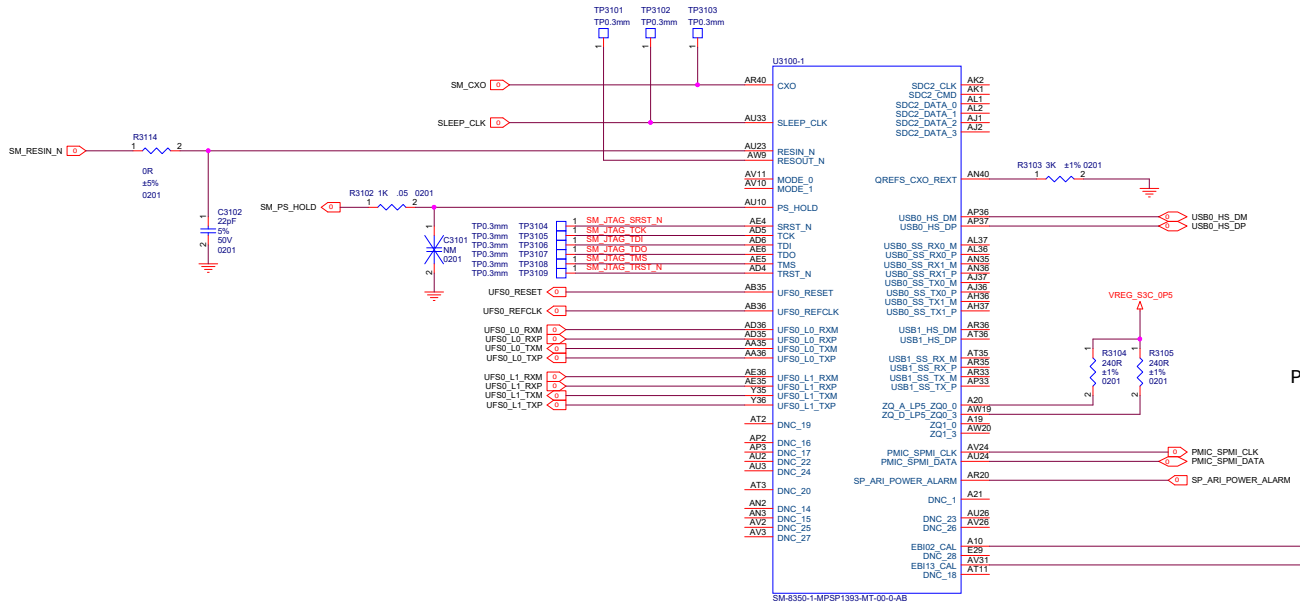

Place all ZQ resistors close to SM8350

MSM skin temperature thermistor

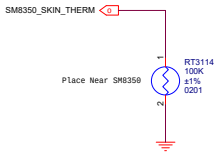

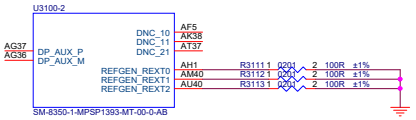

Quiet thermistor Place on a cool place

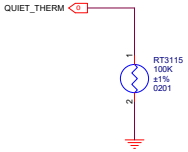

Title	8350 EVB	
Size A2	Document Number SM8350 Control	Rev P0
Date: Monday, October 26, 2020	Sheet 31 of 83	

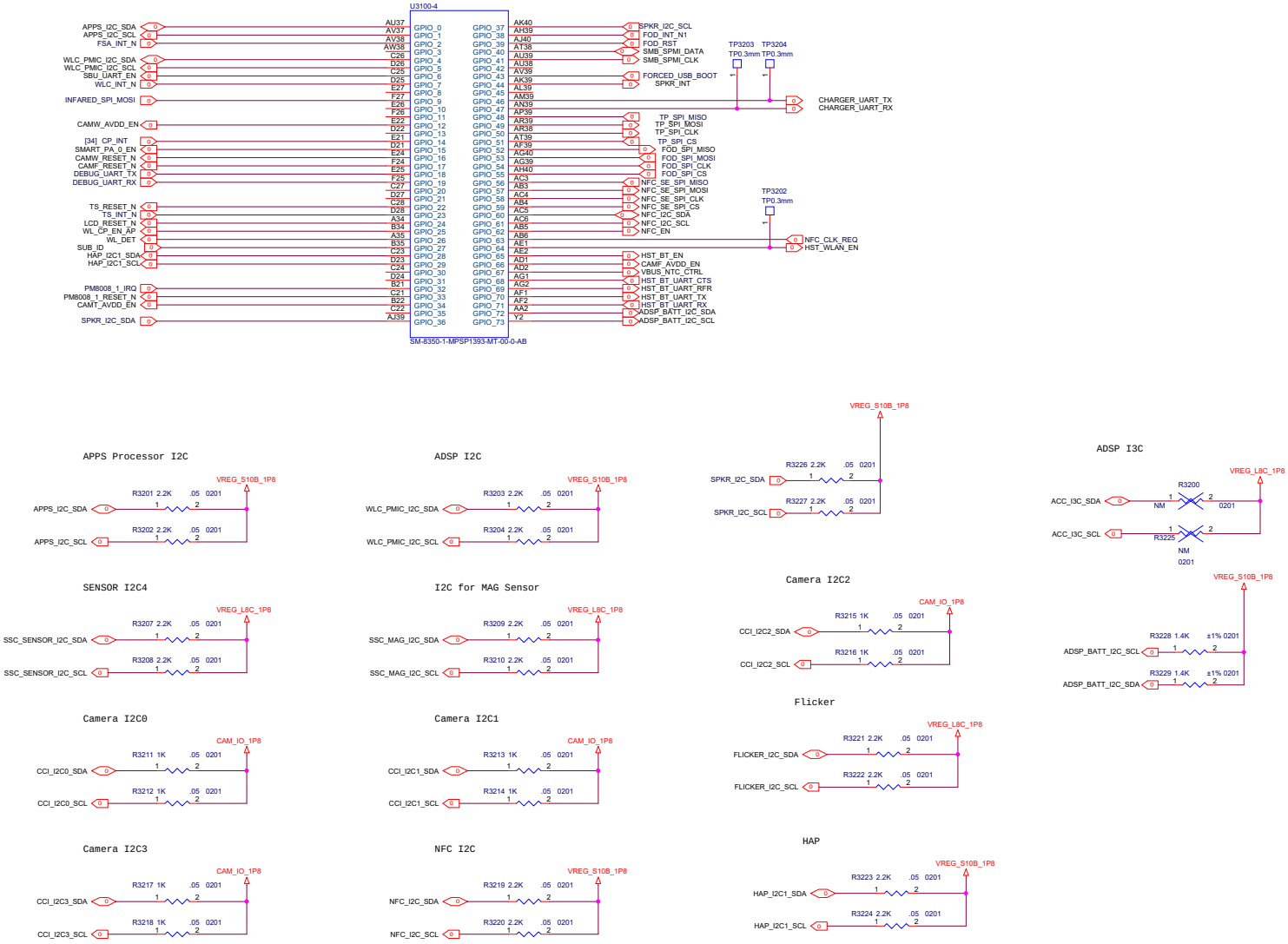

Title	8350 EVB		
Size A2	Document Number SDM855 GPIO-1		Rev P0
Date: Monday, October 26, 2020	Sheet 32 of 83		

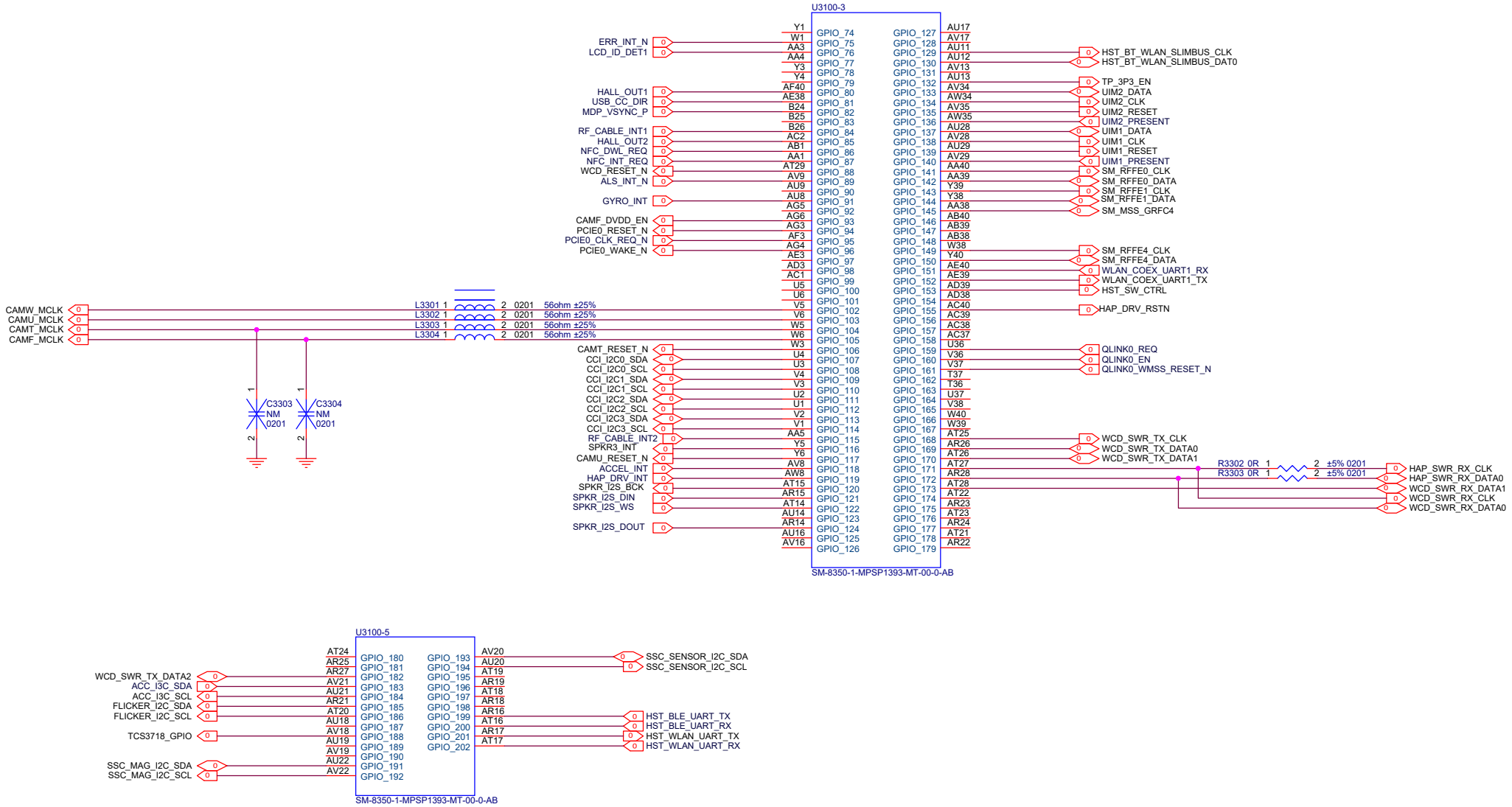

Title	8350 EVB		
Size A3	Document Number SDM855 GPIO-2		Rev P0
Date: Monday, October 26, 2020	Sheet 33 of 83		

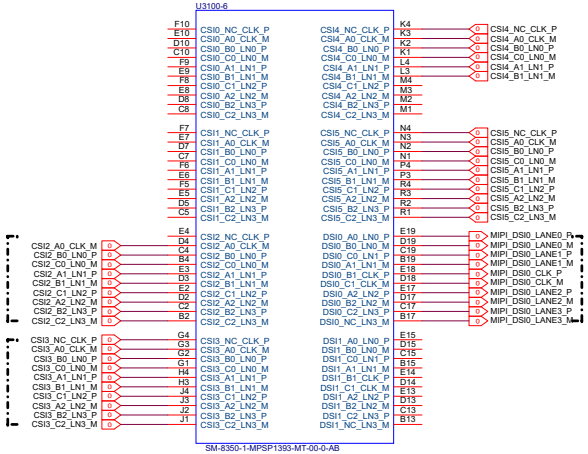

Title	83S0 EVB	
Size A2	Document Number SDM865 MIPI	Rev P0
Date: Monday, October 26, 2020	Sheet 34 of 83	

Title	8350 EVB	
Size A3	Document Number Reserved(for MIPI)	Rev P0
Date: Monday, October 26, 2020	Sheet 35 of 83	

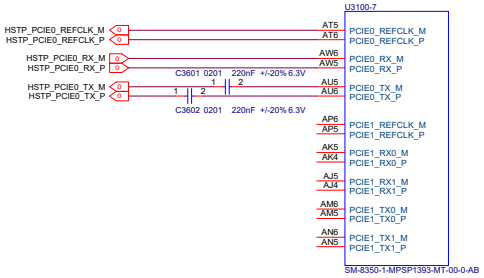

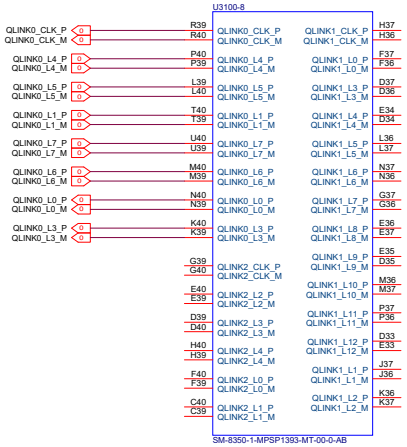

Title	8350 EVB		
Size A2	Document Number SDM855 RF INTF		Rev P0
Date: Monday, October 26, 2020	Sheet 36 of 83		

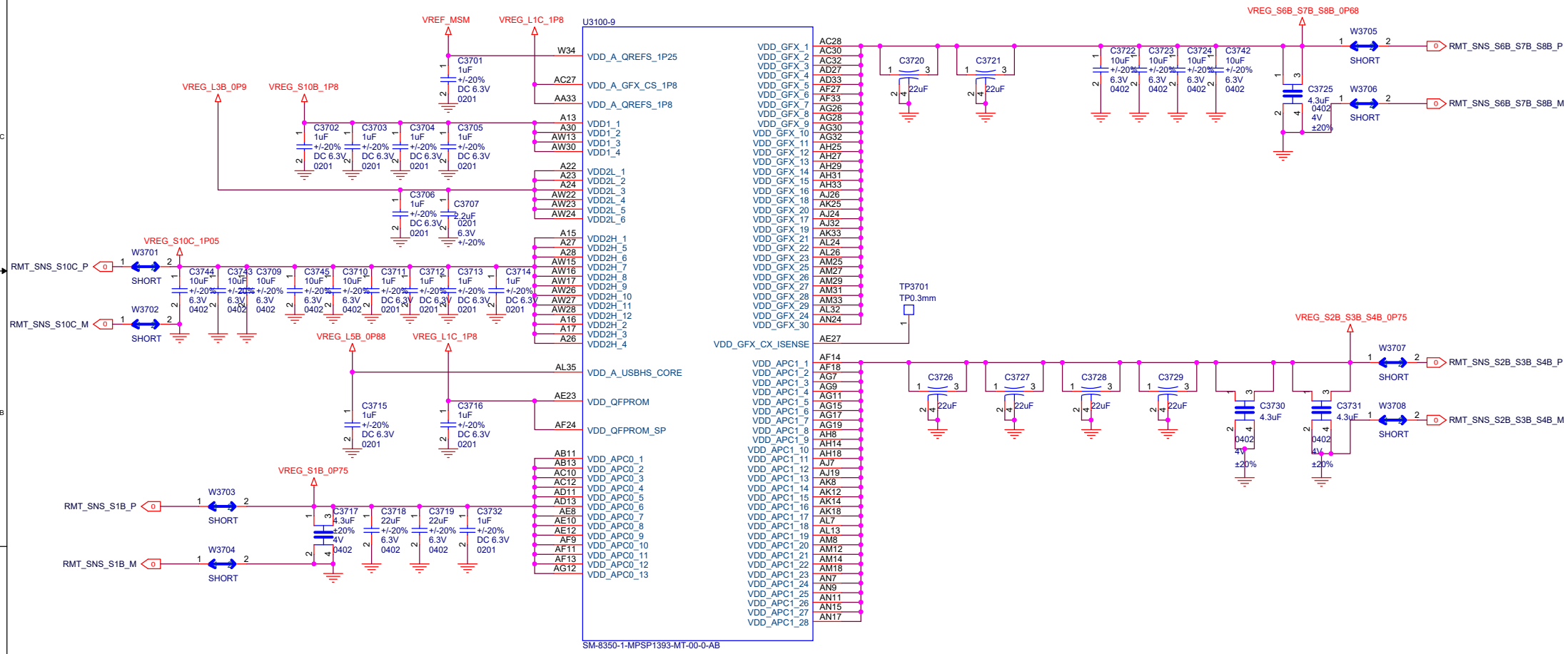

Title	8350 EVB		
Size A3	Document Number SDM855 PWR1		Rev P0
Date: Monday, October 26, 2020	Sheet 37 of 83		

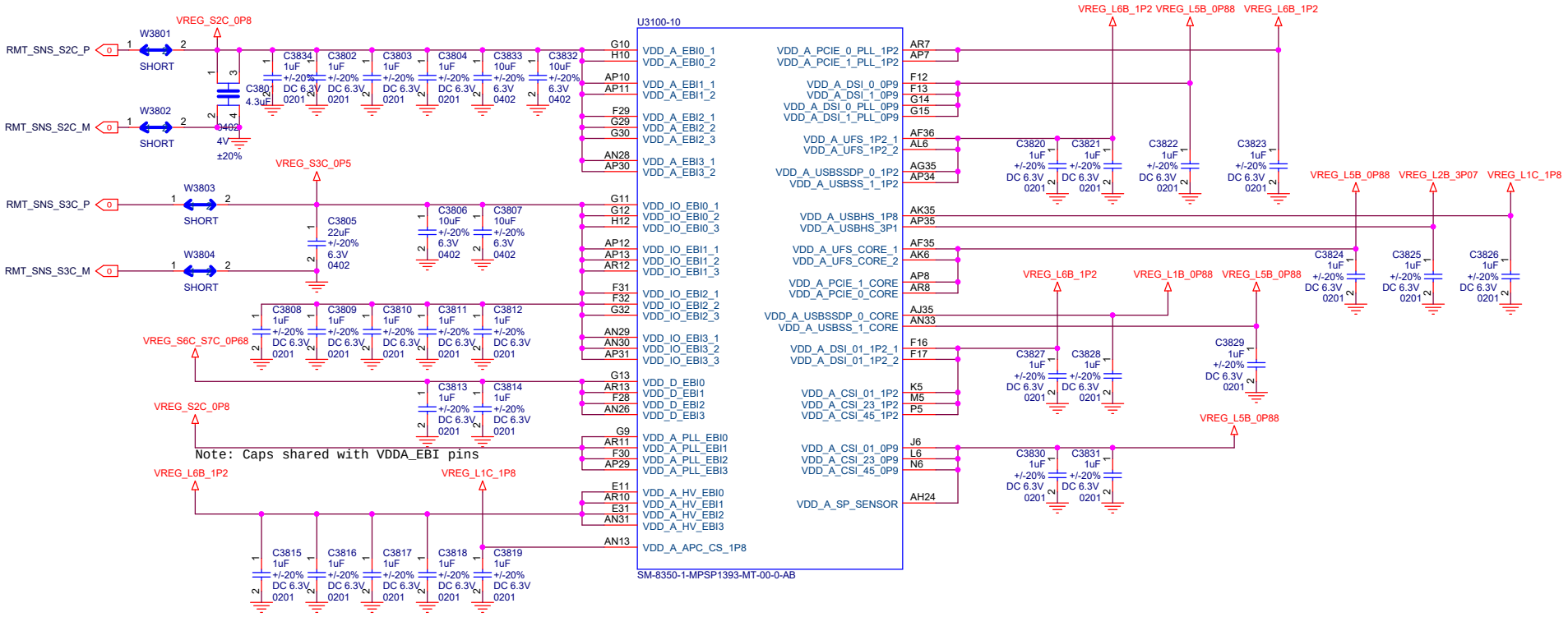

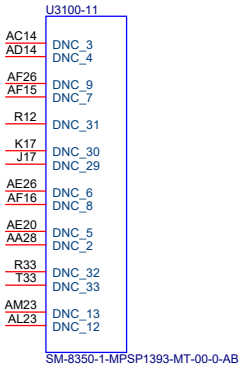

Title	8350 EVB
Size A3	Document Number SDM855 PWR2
Rev	P0
Date:	Monday, October 26, 2020
Sheet	38 of 83

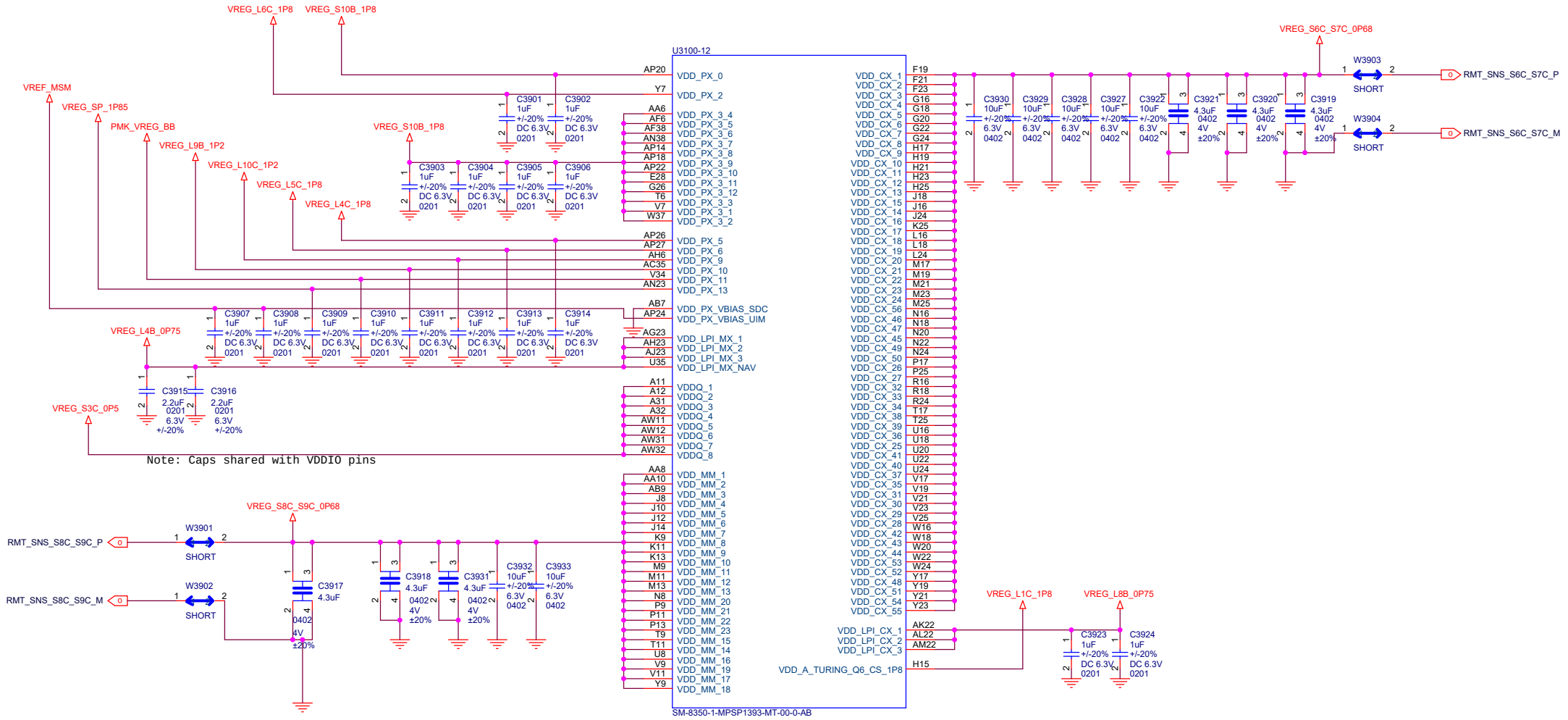

Title	8350 EVB	
Size A3	Document Number SDM855 PWR3	Rev P0
Date: Monday, October 26, 2020	Sheet 39 of 83	

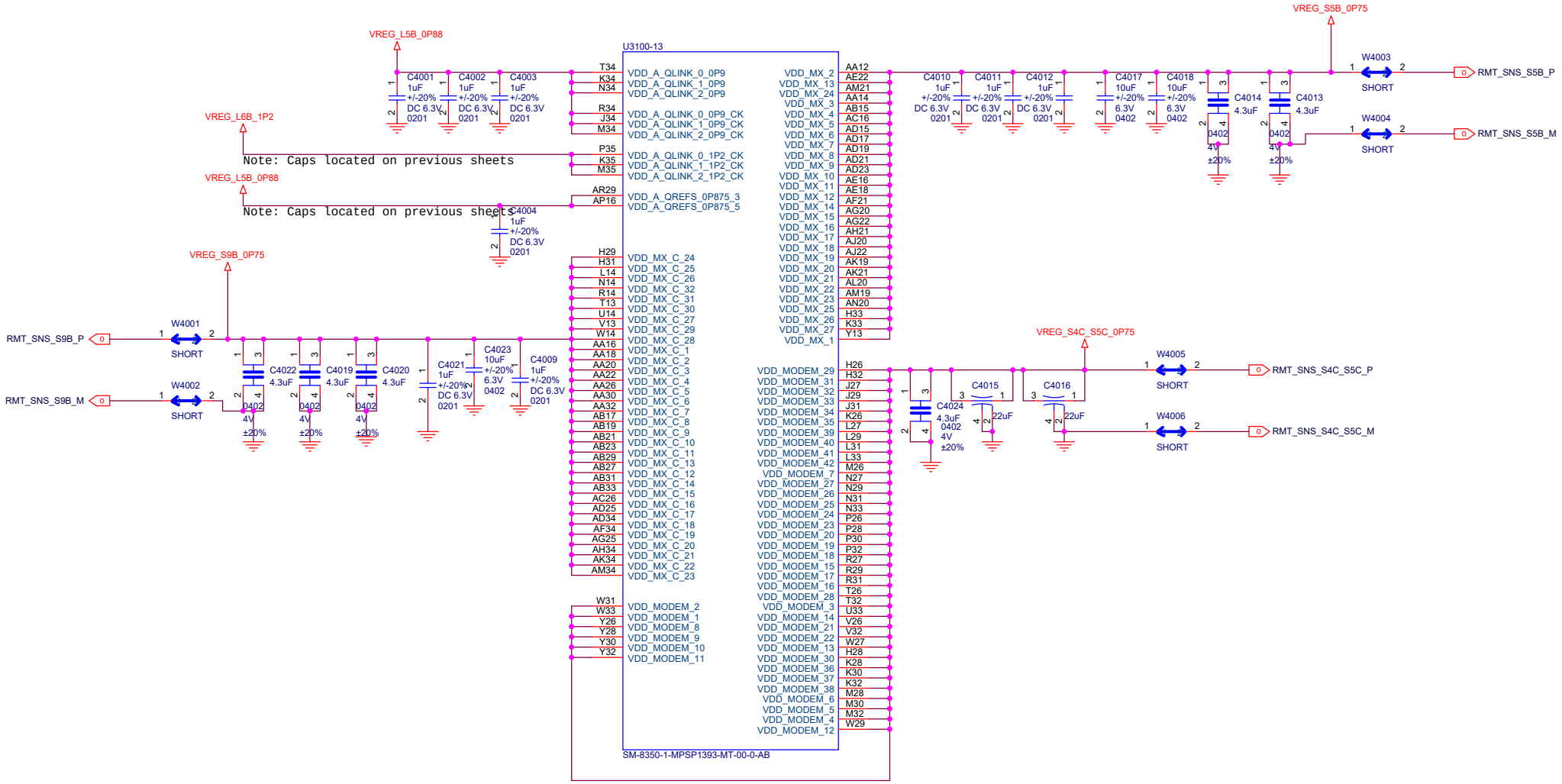

Title	8350 EVB	
Size A3	Document Number SDM855 PWR4	Rev P0
Date: Monday, October 26, 2020	Sheet 40 of 83	

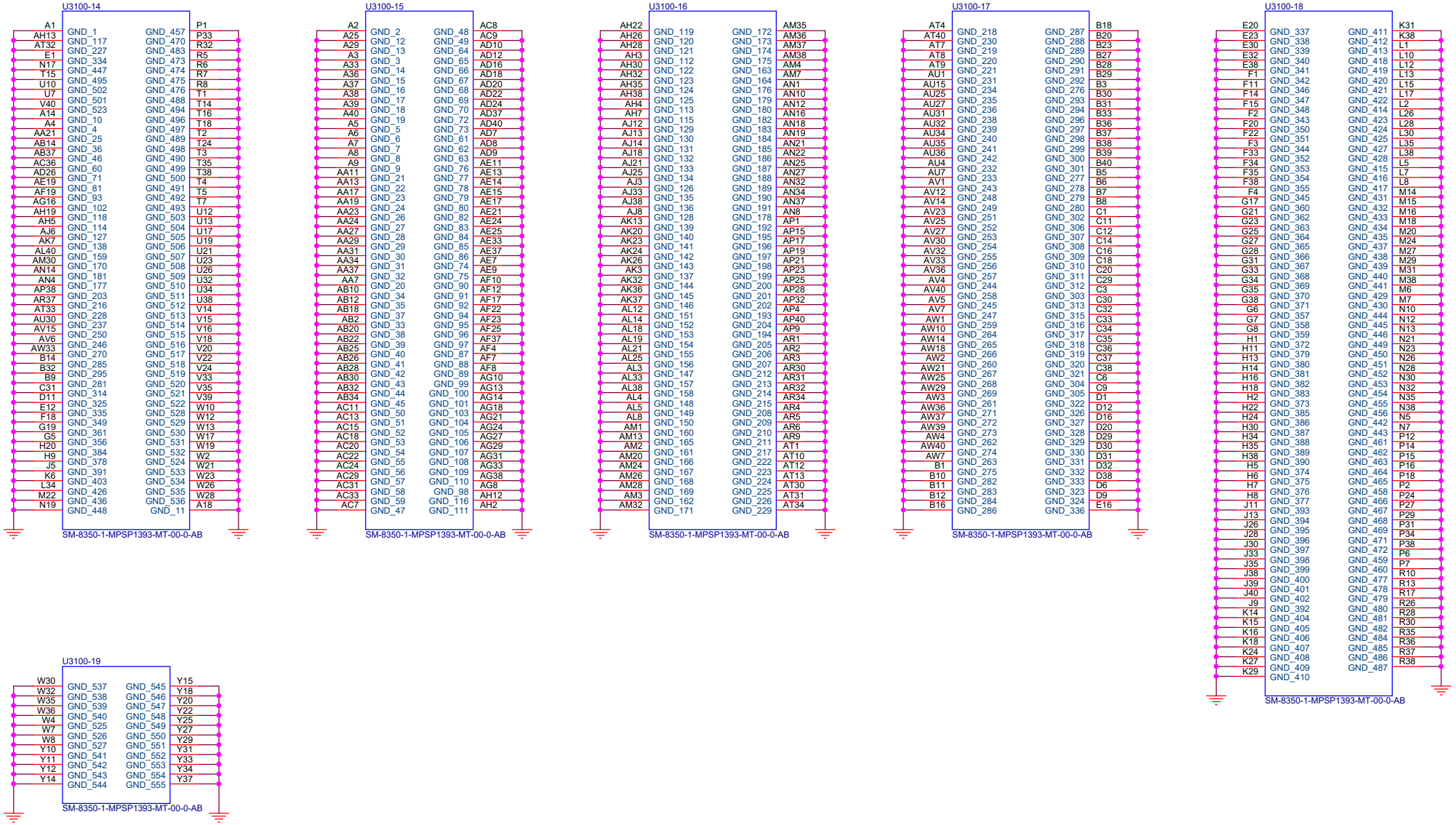

Title	8350 EVB	
Size A3	Document Number SDM855 GND	Rev P0
Date: Monday, October 26, 2020	Sheet 41 of 83	

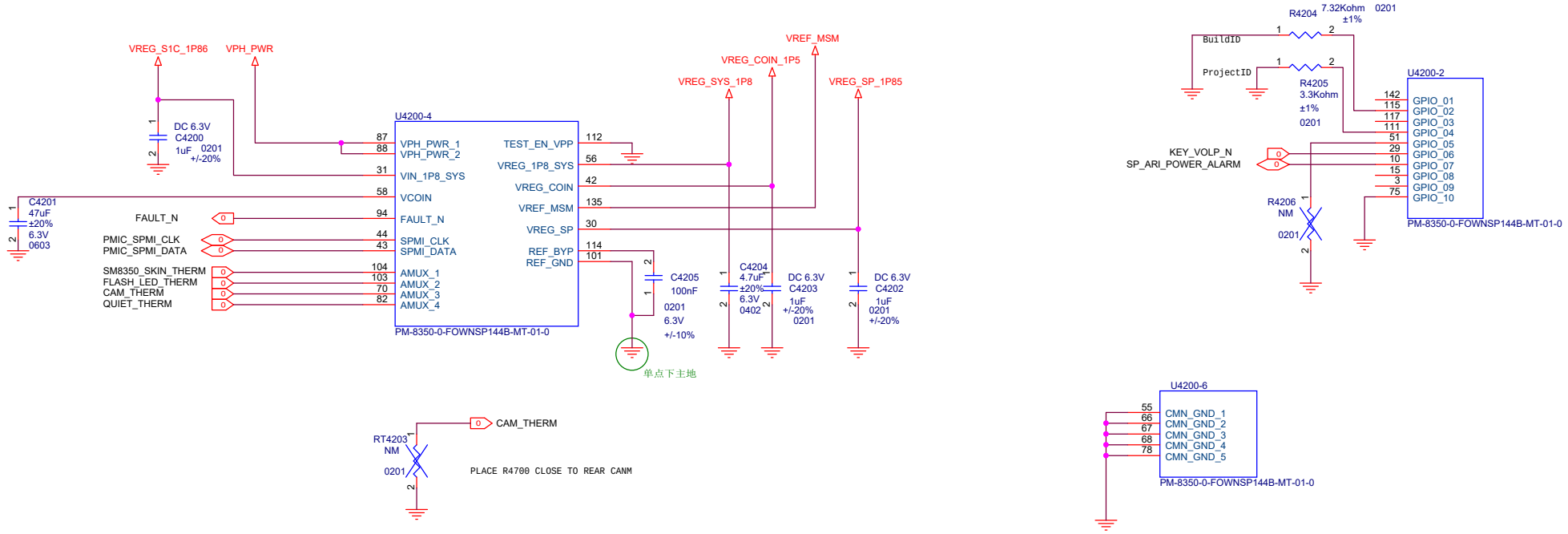

Title	8350 EVB	
Size A3	Document Number PM855 XO&CTRL	Rev P0
Date: Monday, October 26, 2020	Sheet 42 of 83	

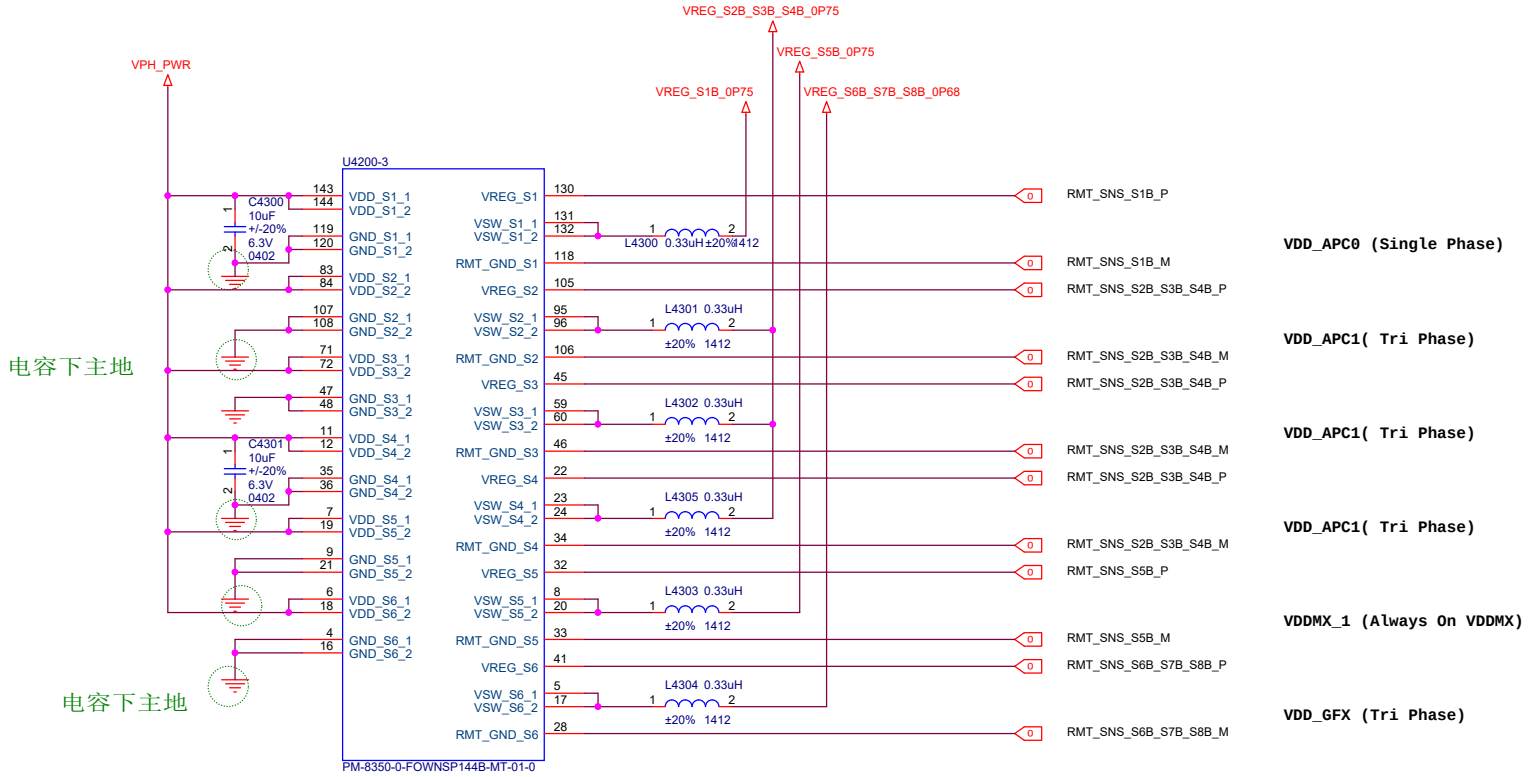

Title	8350 EVB	
Size A3	Document Number PM855 BUCK CONVERTER1	Rev P0
Date: Monday, October 26, 2020	Sheet 43 of 83	

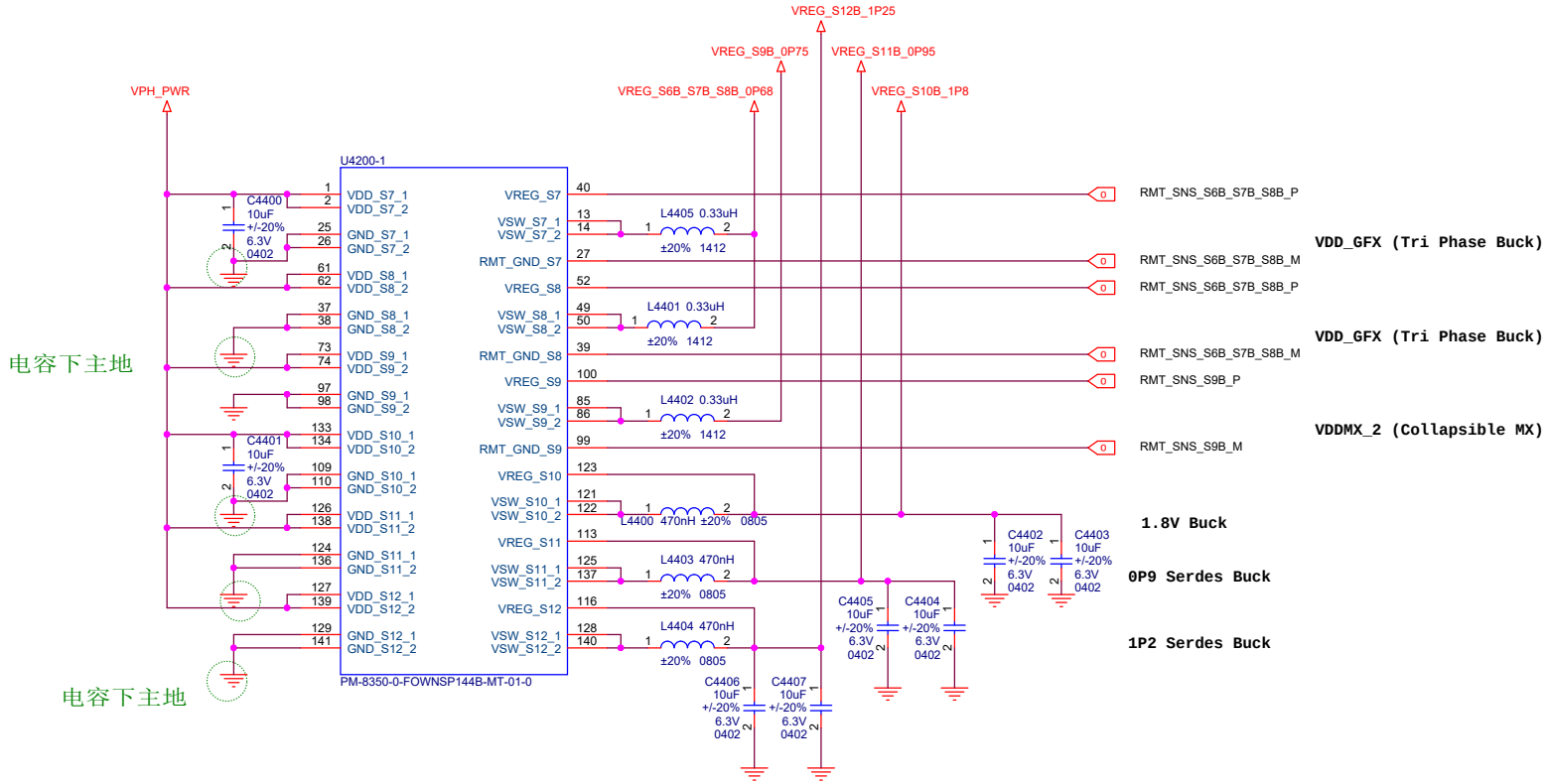

Title	8350 EVB	
Size A3	Document Number PM855 BUCK CONVERTER2	Rev P0
Date: Monday, October 26, 2020	Sheet 44 of 83	

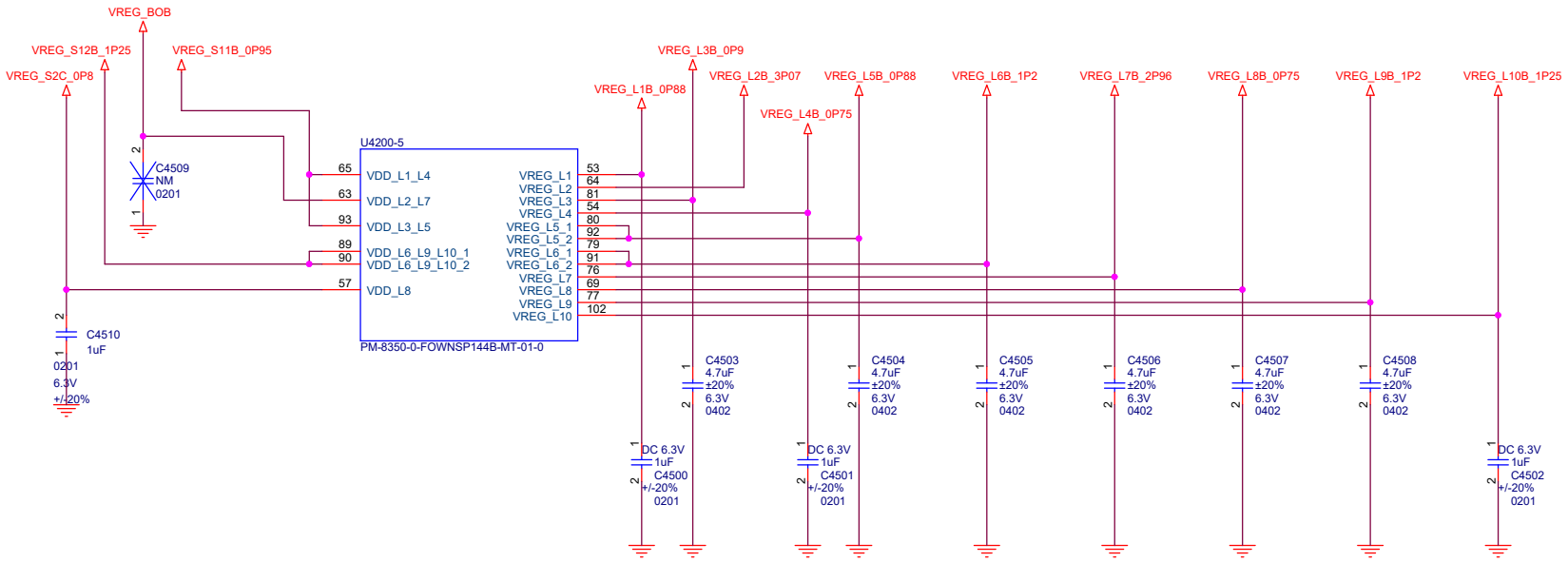

Title	8350 EVB	
Size A3	Document Number PM855 LDOs	Rev P0
Date: Monday, October 26, 2020	Sheet 45 of 83	

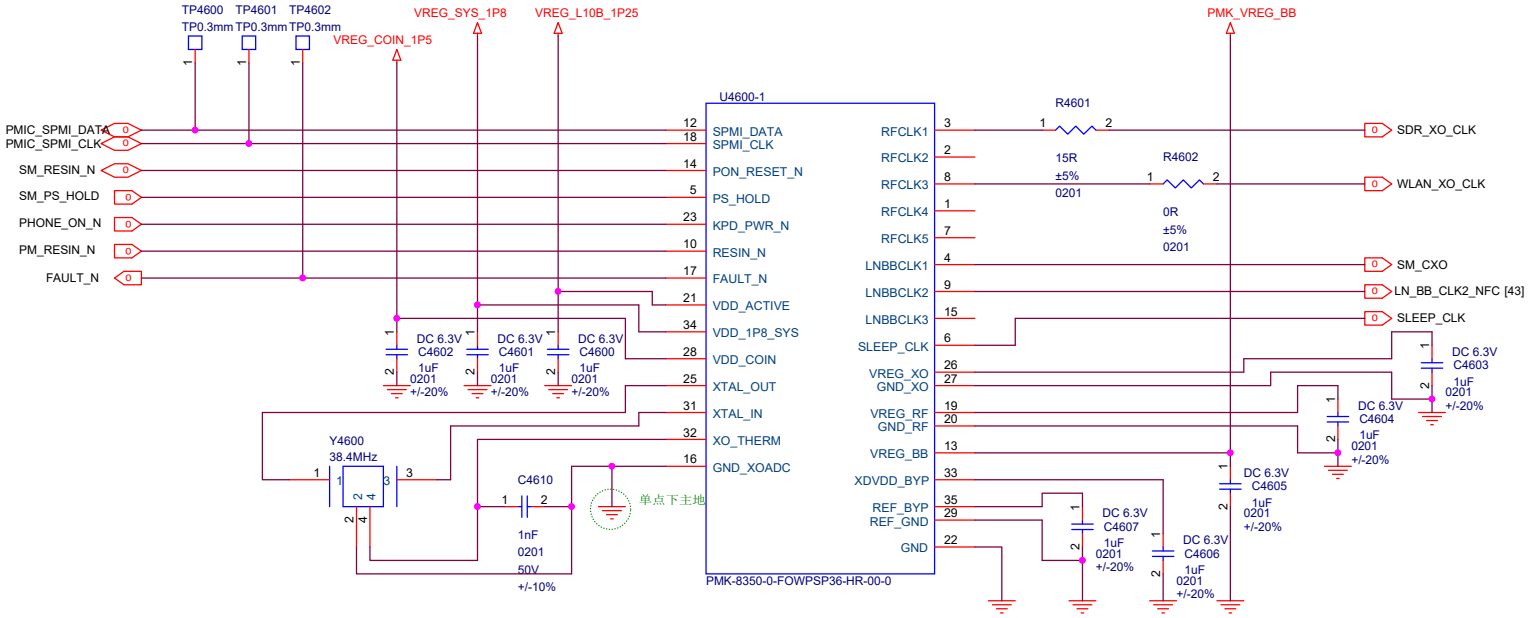

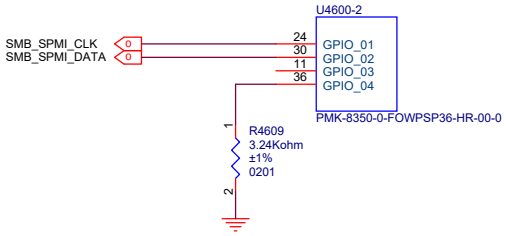

Title	8350 EVB	
Size A3	Document Number PM855 GPIO&GND	Rev P0
Date: Monday, October 26, 2020	Sheet 46 of 83	

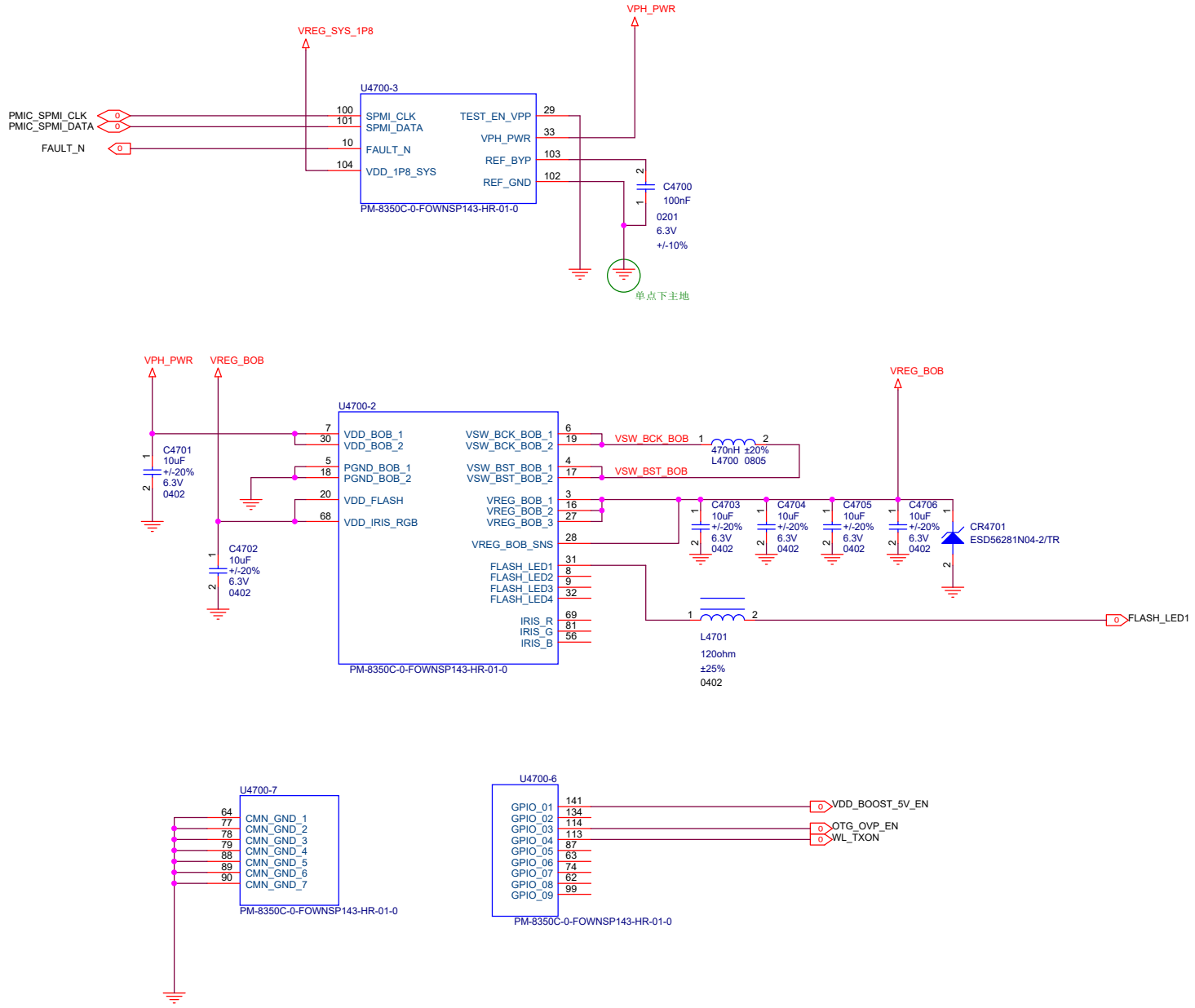

Title	8350 EVB	
Size A3	Document Number PM855A CTRL&GND	Rev P0
Date: Monday, October 26, 2020	Sheet 47 of 83	

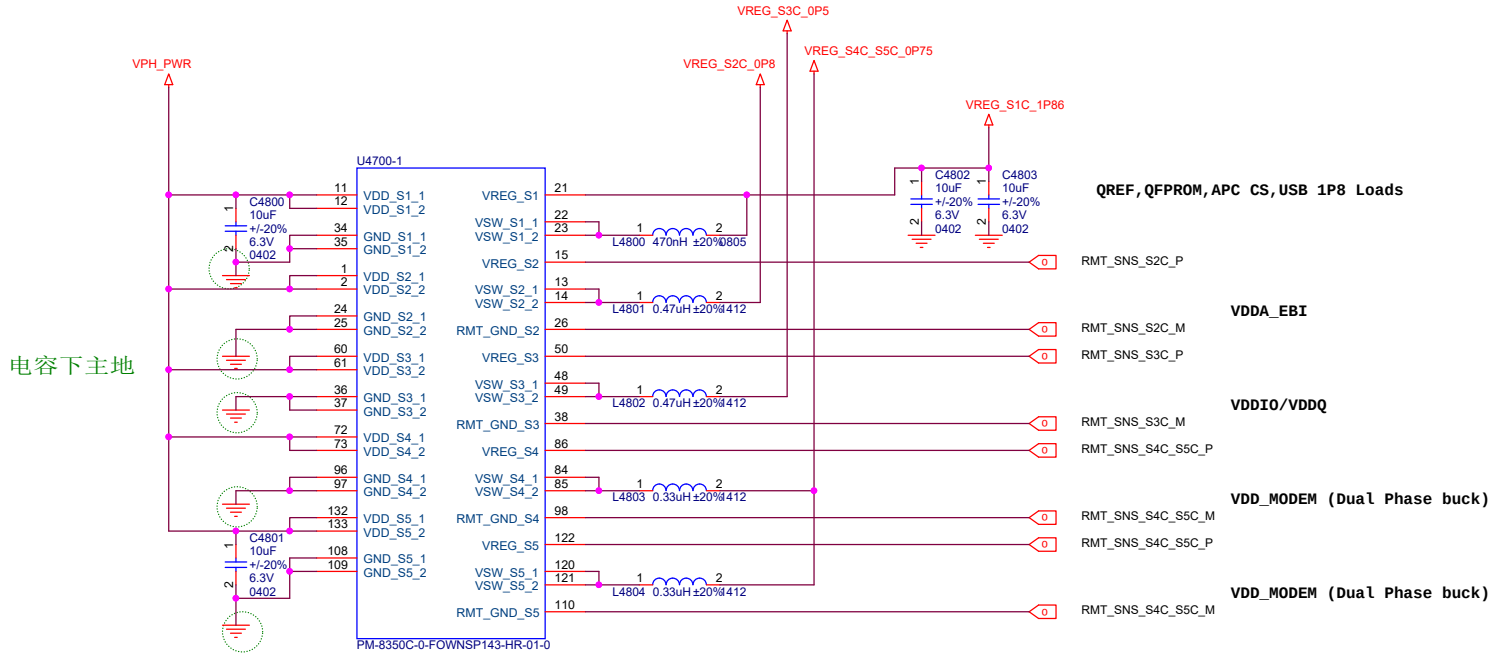

Title	8350 EVB	
Size A3	Document Number PM855A BUCK CONVERTER1	Rev P0
Date: Monday, October 26, 2020	Sheet 48 of 83	

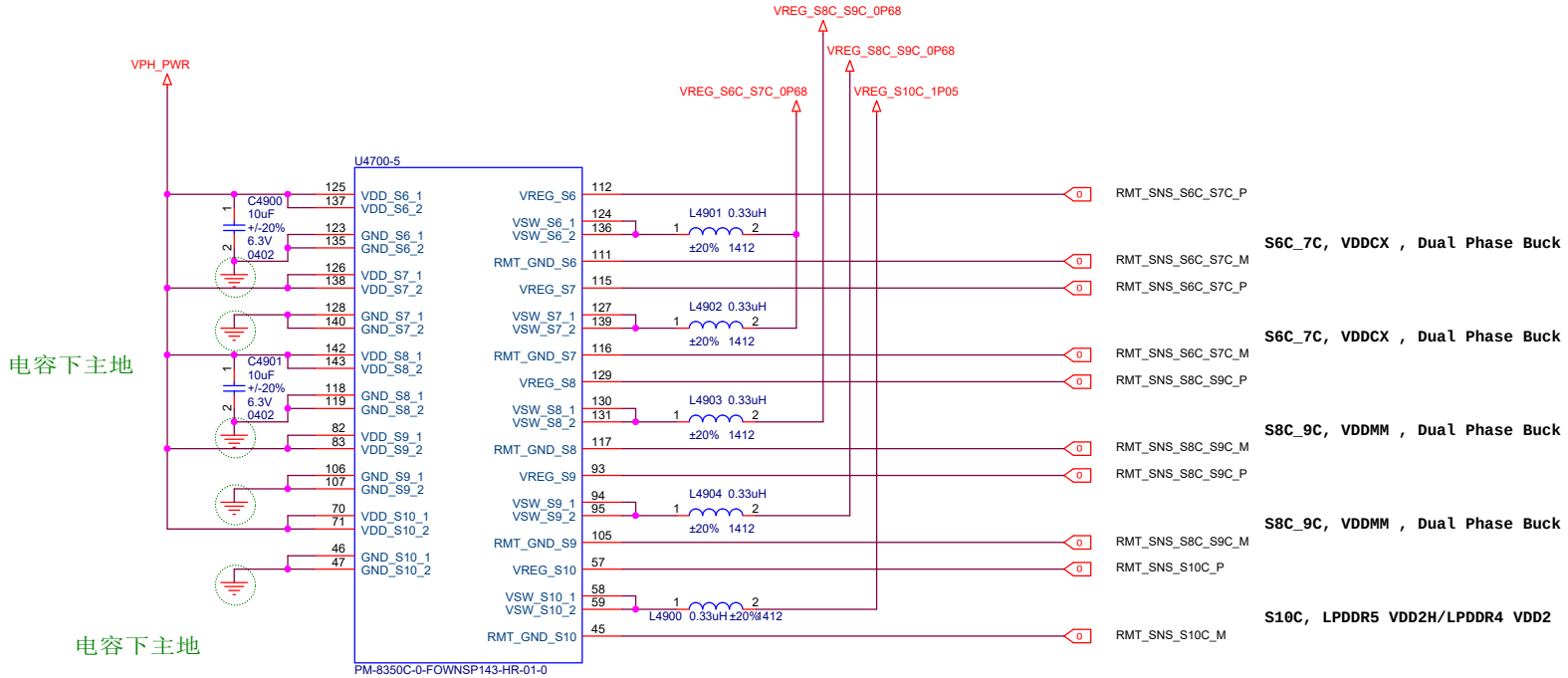

Title	8350 EVB	
Size A3	Document Number PM855A BUCK CONVERTER2	Rev P0
Date: Monday, October 26, 2020	Sheet 49 of 83	

Title	8350 EVB
Size A3	Document Number PM855A AMOLED&BOB&FLASH
Rev	P0
Date:	Monday, October 26, 2020
Sheet	50 of 83

L2C TP_VDDIO
L3C TP_AVDD
L7C SENSOR_3P0
L8C SENSOR_1P8
L11C FOD
L12C OLED_VDDIO
L13C OLED_VCI

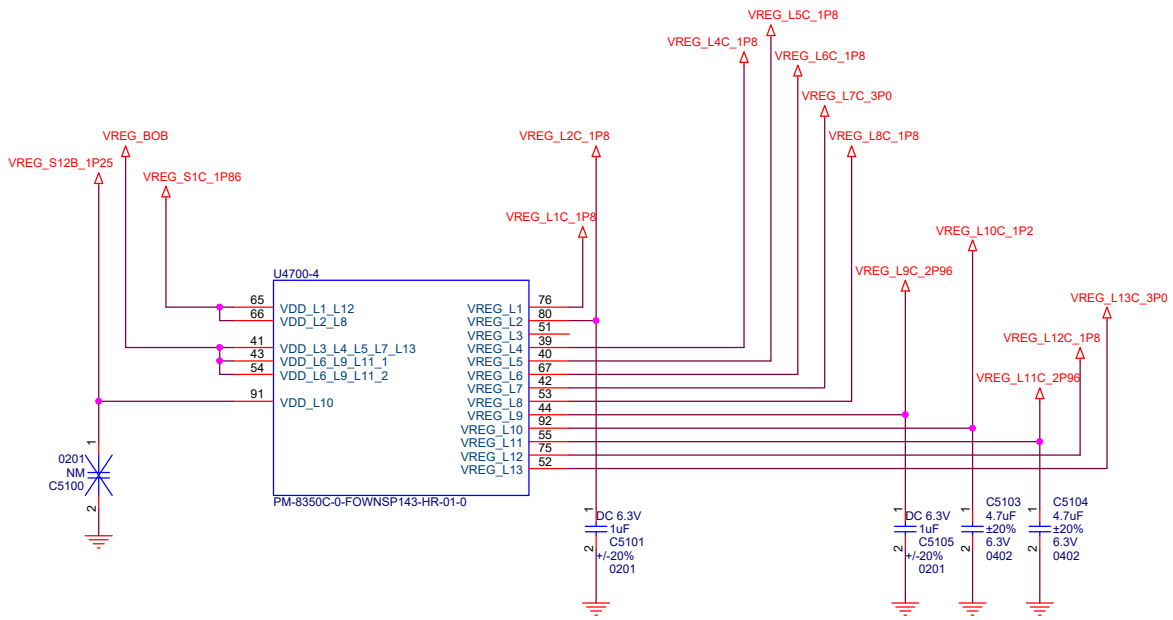

Title	8350 EVB	
Size A3	Document Number PM855A LDOs	Rev P0
Date: Monday, October 26, 2020	Sheet 51 of 83	

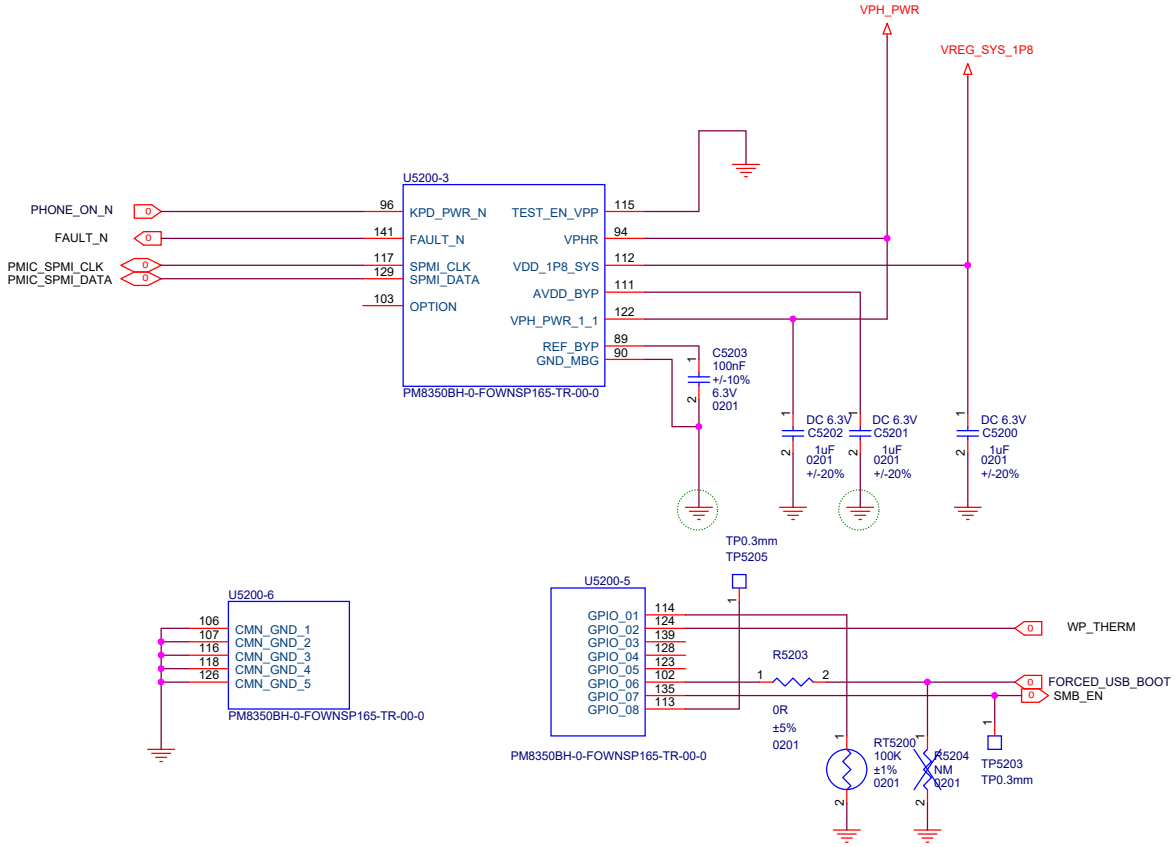

位置由thermal确认

Title	8350 EVB		
Size A3	Document Number PM855B CTRL&GND		Rev P0
Date: Monday, October 26, 2020	Sheet 52 of 83		

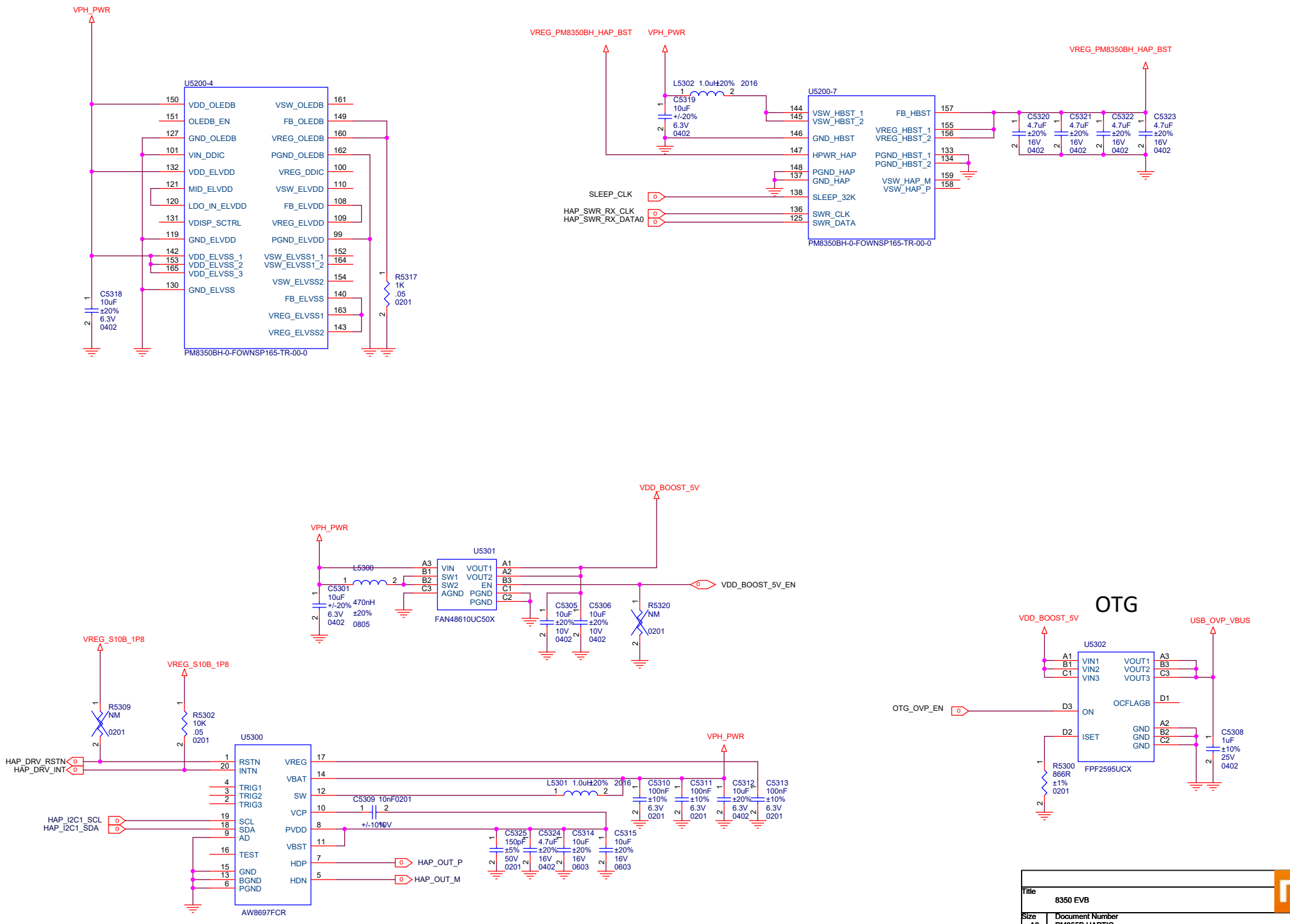
VPH_PWR
U5200-4
VDD_OLEDB
OLEDB_EN
GND_OLEDB
VIN_DDIC
VDD_ELVDD
MID_ELVDD
LDO_IN_ELVDD
VDISP_SCTRL
GND_ELVDD
VDD_ELVSS_1
VDD_ELVSS_2
VDD_ELVSS_3
GND_ELVSS
VSW_OLEDB
FB_OLEDB
VREG_OLEDB
PGND_OLEDB
VREG_DDIC
VSW_ELVDD
FB_ELVDD
VREG_ELVDD
PGND_ELVDD
VSW_ELVSS1_1
VSW_ELVSS1_2
VSW_ELVSS2
FB_ELVSS
VREG_ELVSS1
VREG_ELVSS2
PM8350BH-0-FOWNSP165-TR-00-0
C5318 10uF ±20% 6.3V 0402
R5317 1K .05 0201
VREG_PM8350BH_HAP_BST
VPH_PWR
L5302 1.0uH ±20% 2016
C5319 10uF +/-20% 6.3V 0402
U5200-7
VSW_HBST_1
VSW_HBST_2
GND_HBST
HPWR_HAP
PGND_HAP
GND_HAP
SLEEP_32K
SWR_CLK
SWR_DATA
FB_HBST
VREG_HBST_1
VREG_HBST_2
PGND_HBST_1
PGND_HBST_2
VSW_HAP_M
VSW_HAP_P
PM8350BH-0-FOWNSP165-TR-00-0
SLEEP_CLK
HAP_SWR_RX_CLK
HAP_SWR_RX_DATA0
C5320 4.7uF ±20% 16V 0402
C5321 4.7uF ±20% 16V 0402
C5322 4.7uF ±20% 16V 0402
C5323 4.7uF ±20% 16V 0402
VDD_BOOST_5V
VPH_PWR
U5301
L5300 470nH ±20% 0805
C5301 10uF +/-20% 6.3V 0402
VIN
SW1
SW2
AGND
VOUT1
VOUT2
EN
PGND
FAN48610UC50X
VDD_BOOST_5V_EN
C5305 10uF ±20% 10V 0402
C5306 10uF ±20% 10V 0402
R5320 NM 0201
VREG_S10B_1P8
R5309 NM 0201
R5302 10K .05 0201
U5300
HAP_DRV_RSTN
HAP_DRV_INT
RSTN
INTN
TRIG1
TRIG2
TRIG3
HAP_I2C1_SCL
HAP_I2C1_SDA
SCL
SDA
AD
TEST
GND
BGND
PGND
VREG
VBAT
SW
VCP
PVDD
VBST
HDP
HDN
AW8697FCR
HAP_OUT_P
HAP_OUT_M
C5309 10nF 0201 +/-10% 10V
L5301 1.0uH ±20% 2016
C5310 100nF ±10% 6.3V 0201
C5311 100nF ±10% 6.3V 0201
C5312 10uF ±20% 6.3V 0402
C5313 100nF ±10% 6.3V 0201
C5325 150pF ±5% 50V 0201
C5324 4.7uF ±20% 16V 0402
C5314 10uF ±20% 16V 0603
C5315 10uF ±20% 16V 0603
OTG
VDD_BOOST_5V
USB_OVP_VBUS
U5302
VIN1
VIN2
VIN3
ON
ISET
VOUT1
VOUT2
VOUT3
OCFLAGB
GND
FPF2595UCX
OTG_OVP_EN
R5300 866R ±1% 0201
C5308 1uF ±10% 25V 0402
Title
8350 EVB
Size A3
Document Number PM855B HAPTIC
Rev P0
Date: Monday, October 26, 2020
Sheet 53 of 83

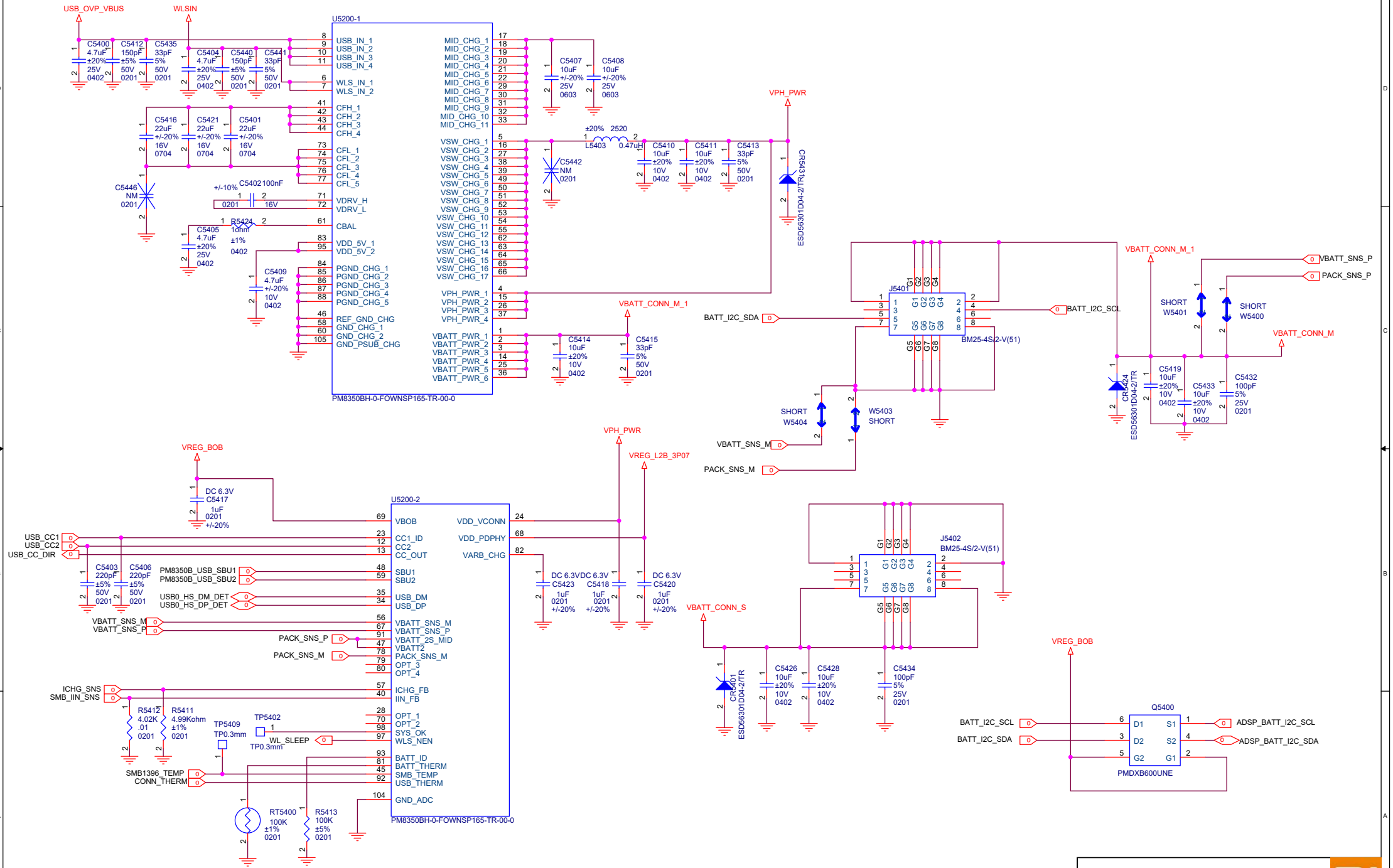

Title	8350 EVB	
Size A3	Document Number PM855B Charger	Rev P0
Date: Monday, October 26, 2020	Sheet 54 of 83	

30W充电删除U5501

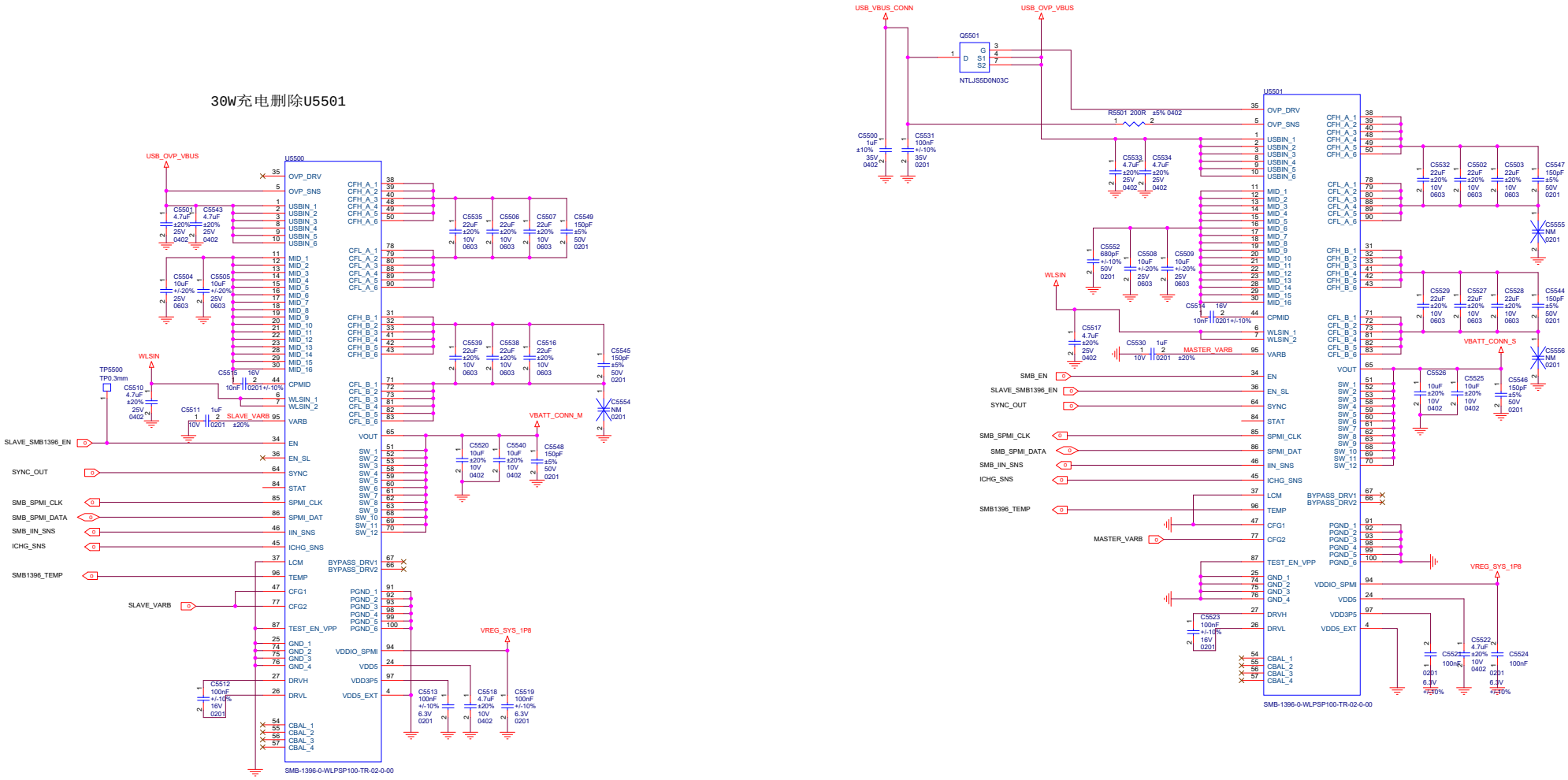

Title	8350 EVB		
Size A2	Document Number SMB1396		Rev P0
Date: Monday, October 26, 2020	Sheet 55 of 83		

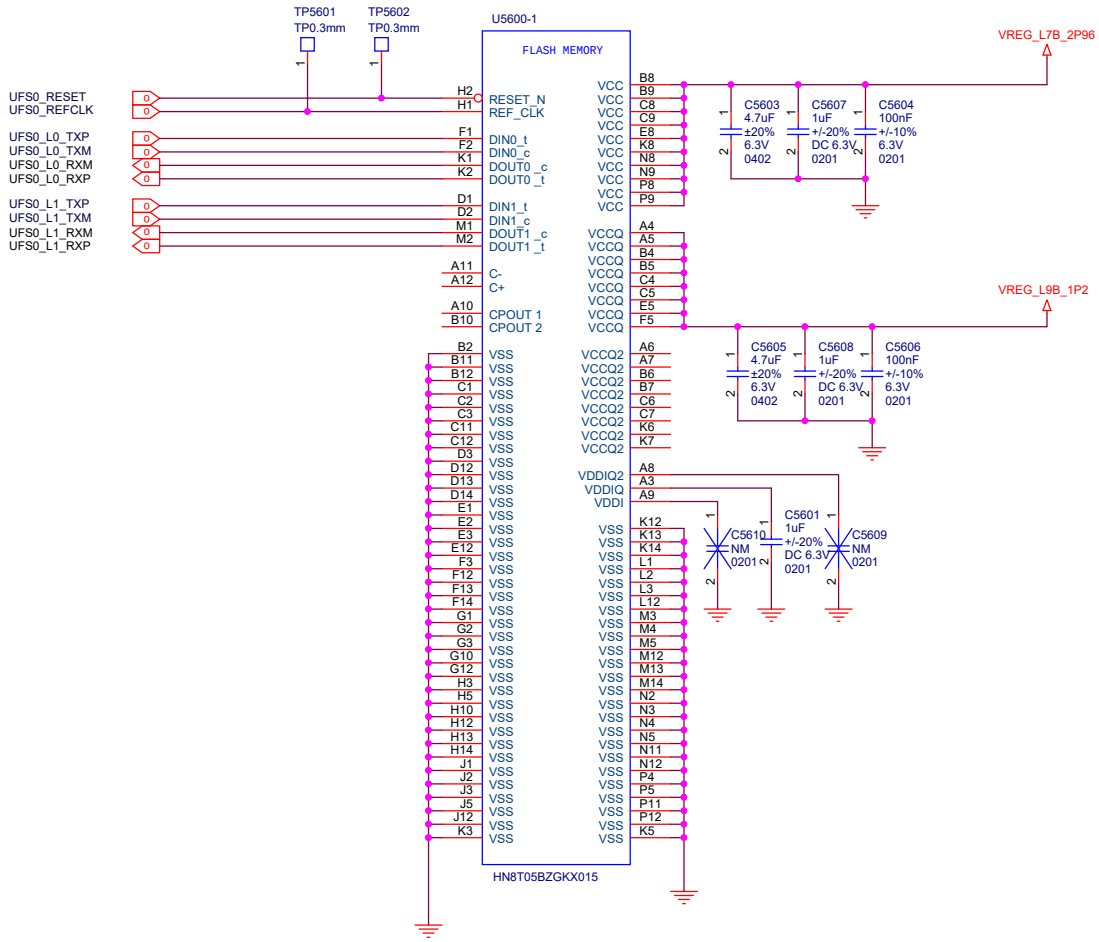

Title	8350 EVB		
Size A3	Document Number MEMORY		Rev P0
Date: Monday, October 26, 2020	Sheet 56 of 83		

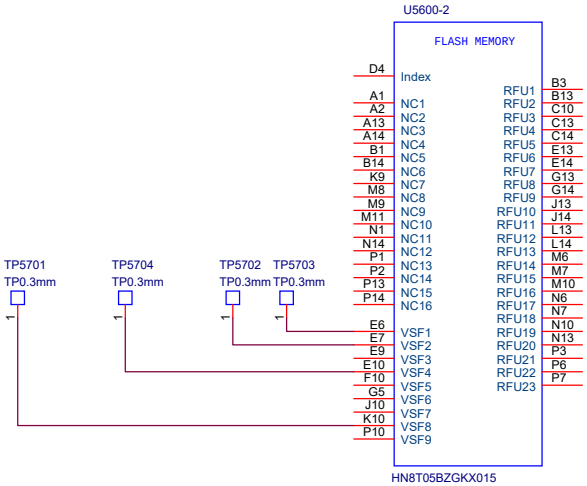

Title	8350 EVB	
Size A3	Document Number MEMORY-2	Rev P0
Date: Monday, October 26, 2020	Sheet 57 of 83	

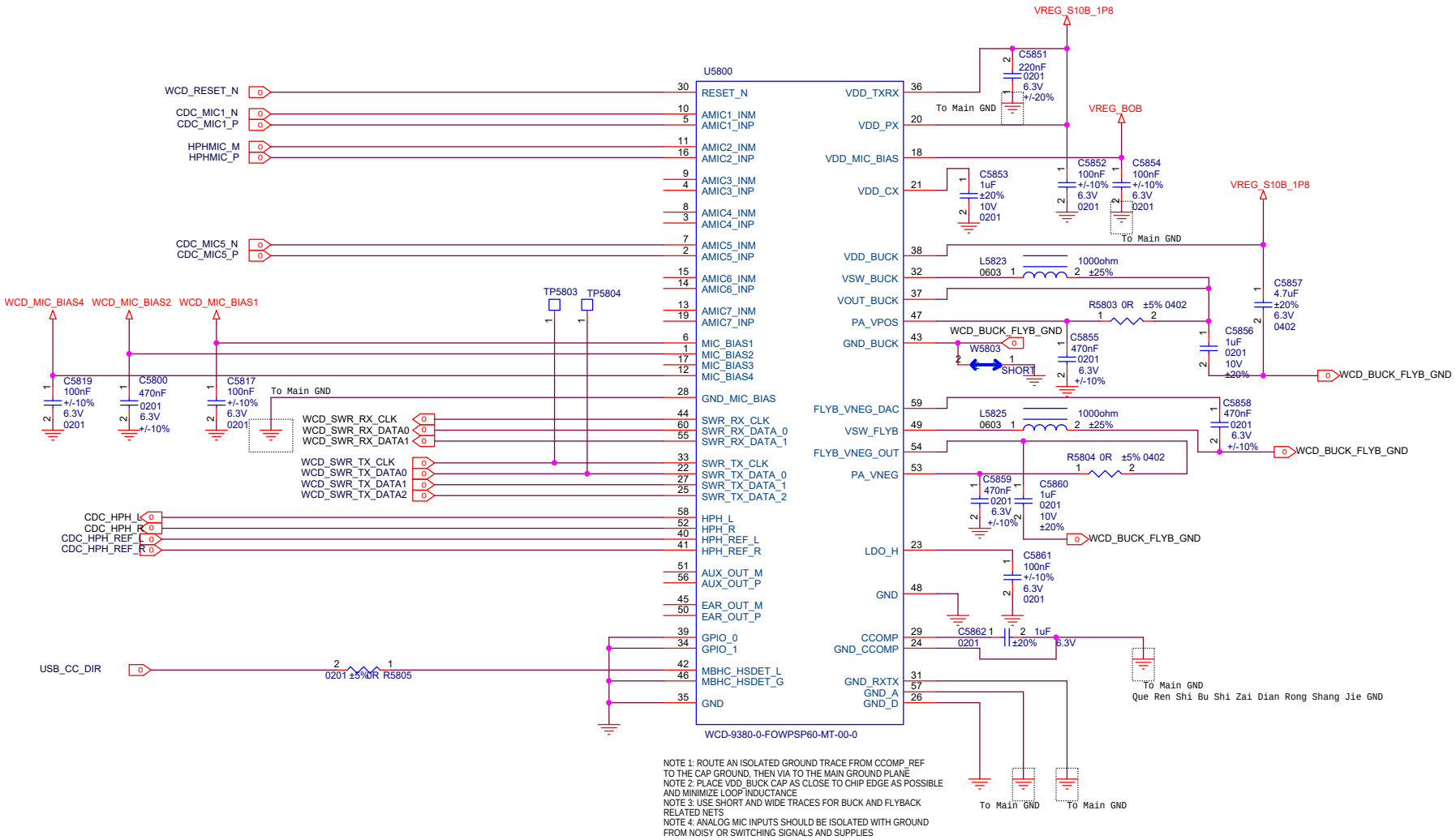

NOTE 1: ROUTE AN ISOLATED GROUND TRACE FROM CCOMP_REF TO THE CAP GROUND, THEN VIA TO THE MAIN GROUND PLANE
NOTE 2: PLACE VDD_BUCK CAP AS CLOSE TO CHIP EDGE AS POSSIBLE AND MINIMIZE LOOP INDUCTANCE
NOTE 3: USE SHORT AND WIDE TRACES FOR BUCK AND FLYBACK RELATED NETS
NOTE 4: ANALOG MIC INPUTS SHOULD BE ISOLATED WITH GROUND FROM NOISY OR SWITCHING SIGNALS AND SUPPLIES

Title	8350 EVB	
Size A3	Document Number WCD9340-1	Rev P0
Date: Monday, October 26, 2020	Sheet 58 of 83	

Title	8350 EVB
Size A3	Document Number WCD9340-2
Rev	P0
Date:	Monday, October 26, 2020
Sheet	59 of 83

HEADSET

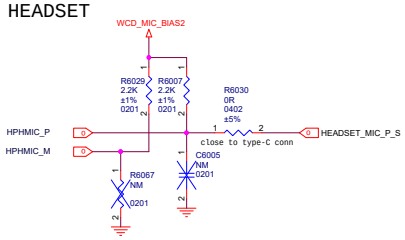

R6029、R6004、C6005靠近WCD9385（U5800）端放置

SPKR PA

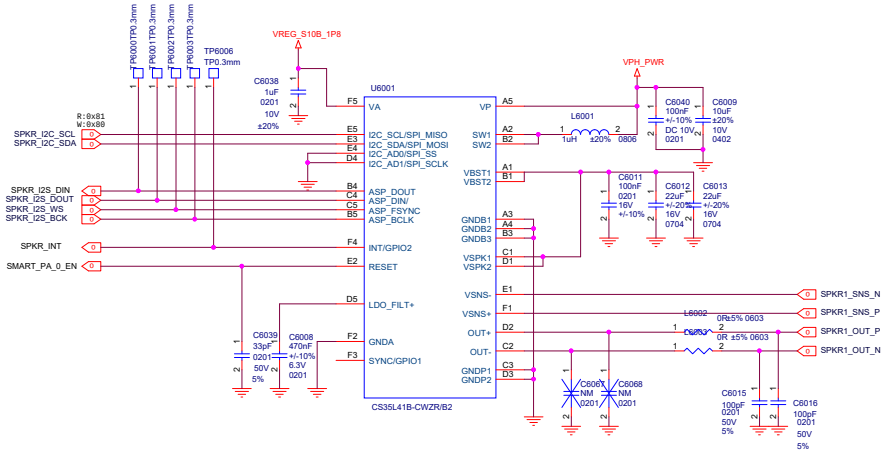

AUX MIC

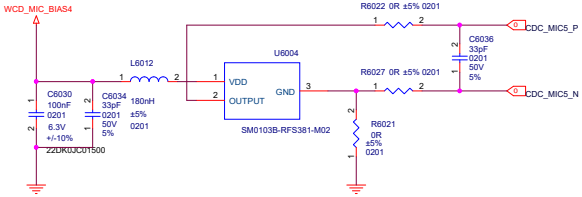

SPKR PA

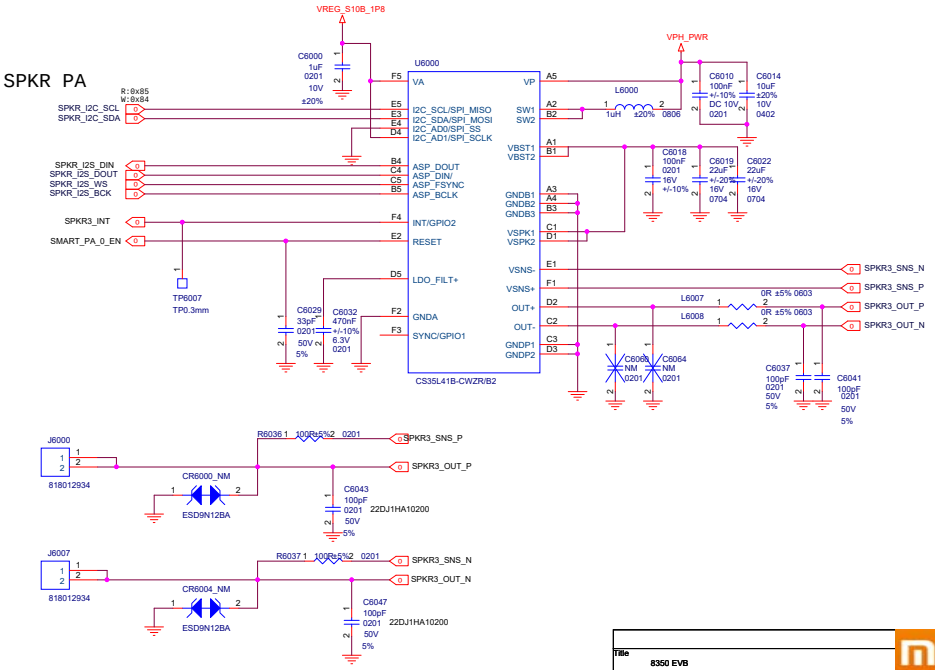

Title	8350 EVB		
Size A2	Document Number AUDIO		Rev P0
Date: Monday, October 26, 2020	Sheet 60 of 83		

A+G

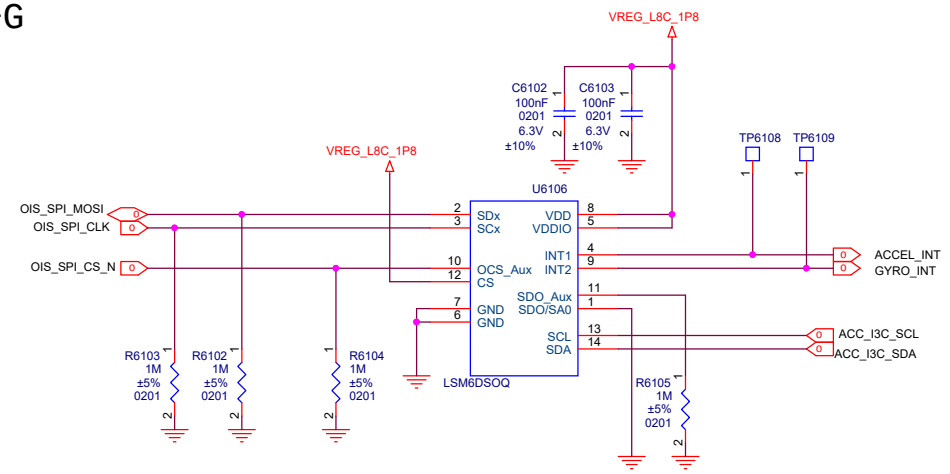

P_L-sensor

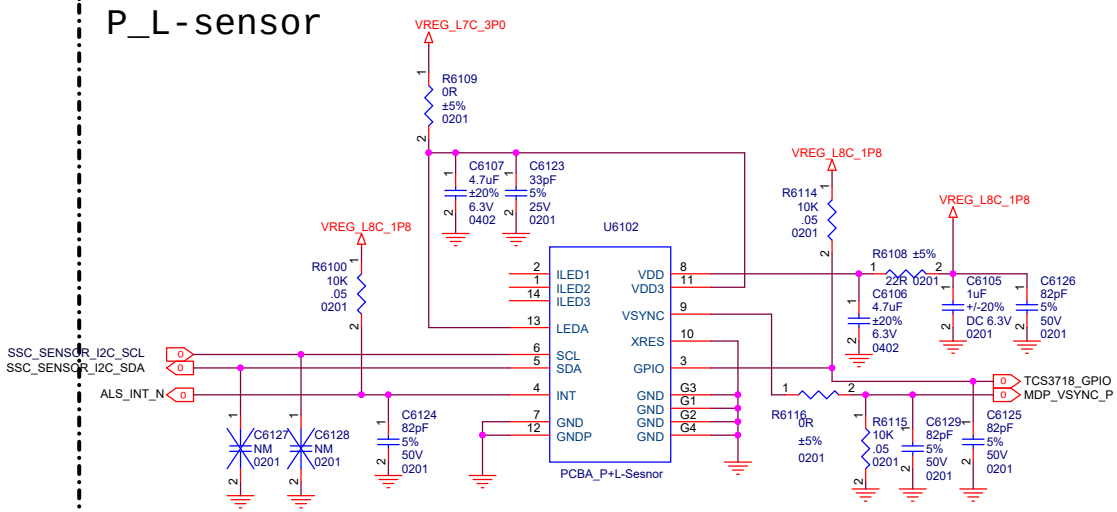

PRESSURE

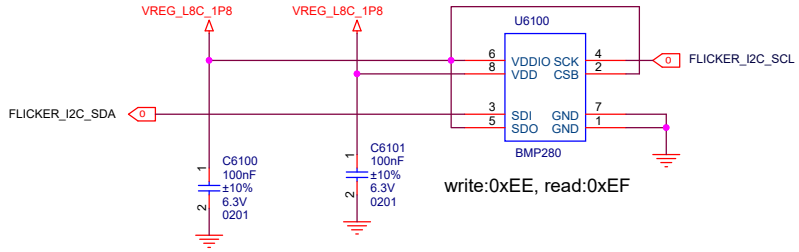

FOD

Sidekey

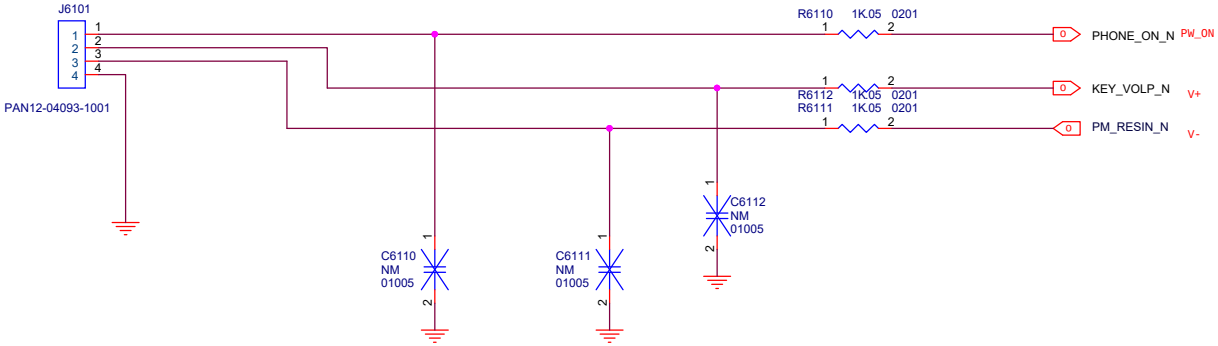

Title	F1 MAIN	
Size A3	Document Number SENSOR	Rev P0
Date: Monday, October 26, 2020	Sheet 62 of 82	

HALL

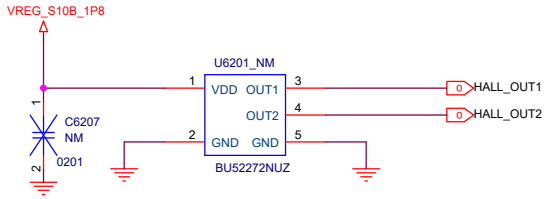

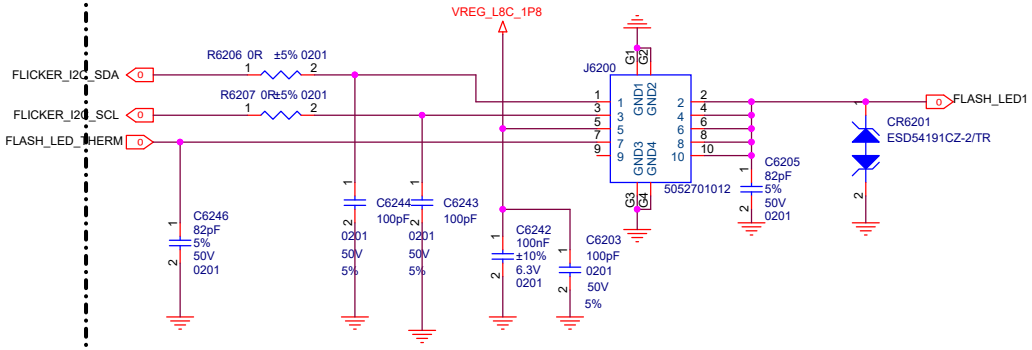

TOF

COMPASS

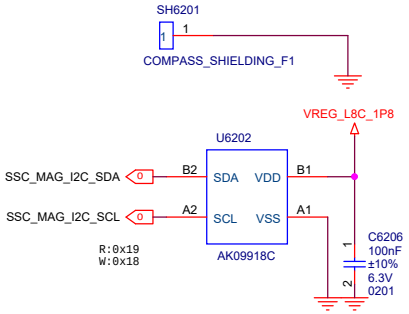

INFRARED

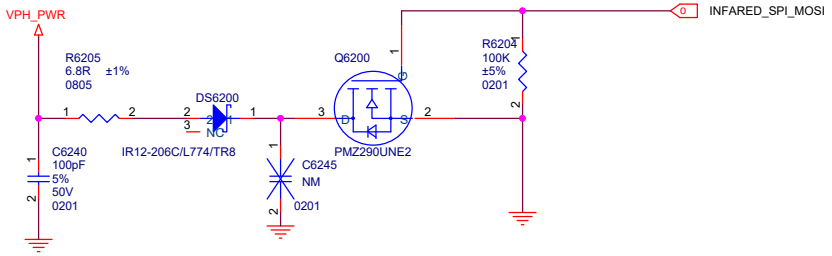

Title	F1 MAIN	
Size A3	Document Number SENSOR-2	Rev P0
Date: Monday, October 26, 2020	Sheet 63 of 82	

Title	F1 MAIN	
Size A4	Document Number SIM	Rev P0
Date: Monday, October 26, 2020	Sheet 64 of 82	

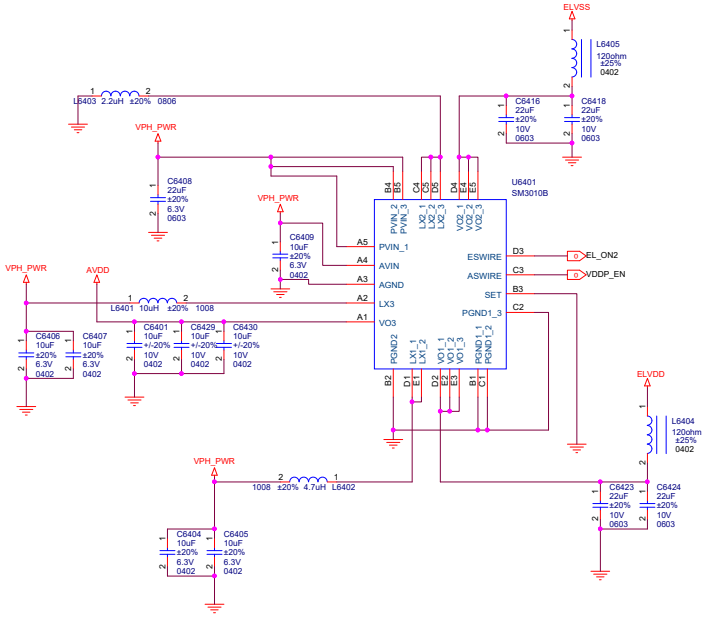

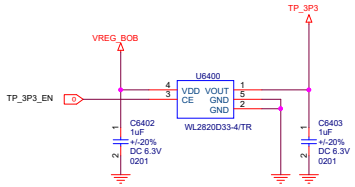

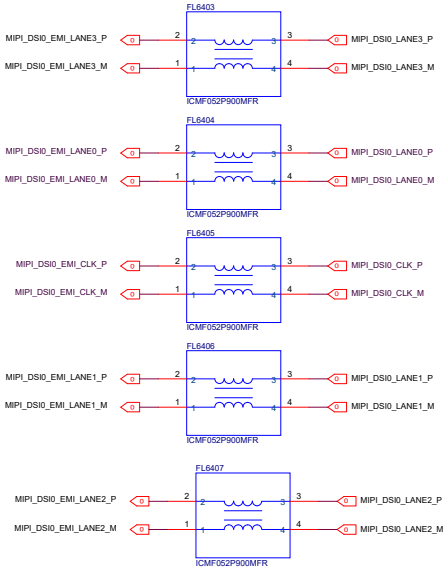

Title	F1 MAIN	
Size A2	Document Number AMOLED	Rev P0
Date: Monday, October 26, 2020	Sheet 65 of 82	

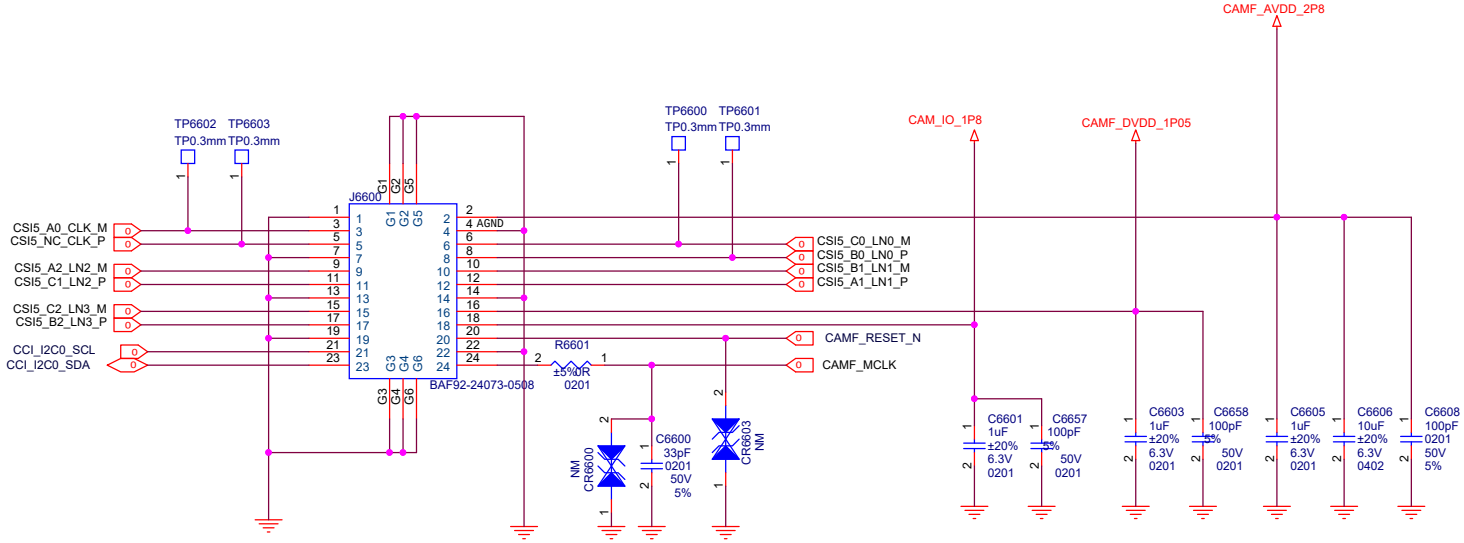

Title	8350 EVB	
Size A3	Document Number FRONT CAMERA	Rev P0
Date: Monday, October 26, 2020	Sheet 66 of 83	

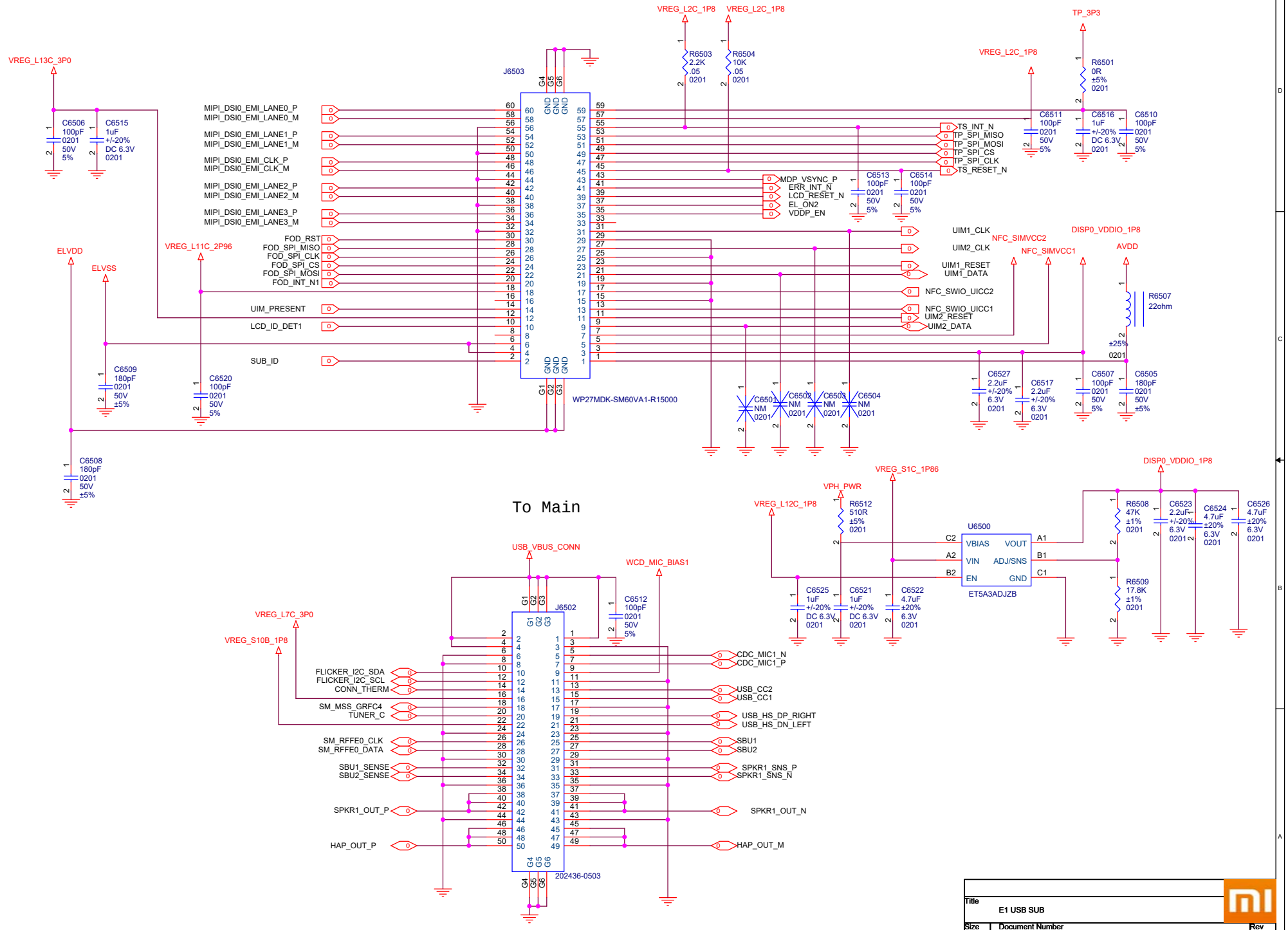

Title	E1 USB SUB	
Size A3	Document Number BTB	Rev P0
Date: Monday, October 26, 2020	Sheet 66 of 82	

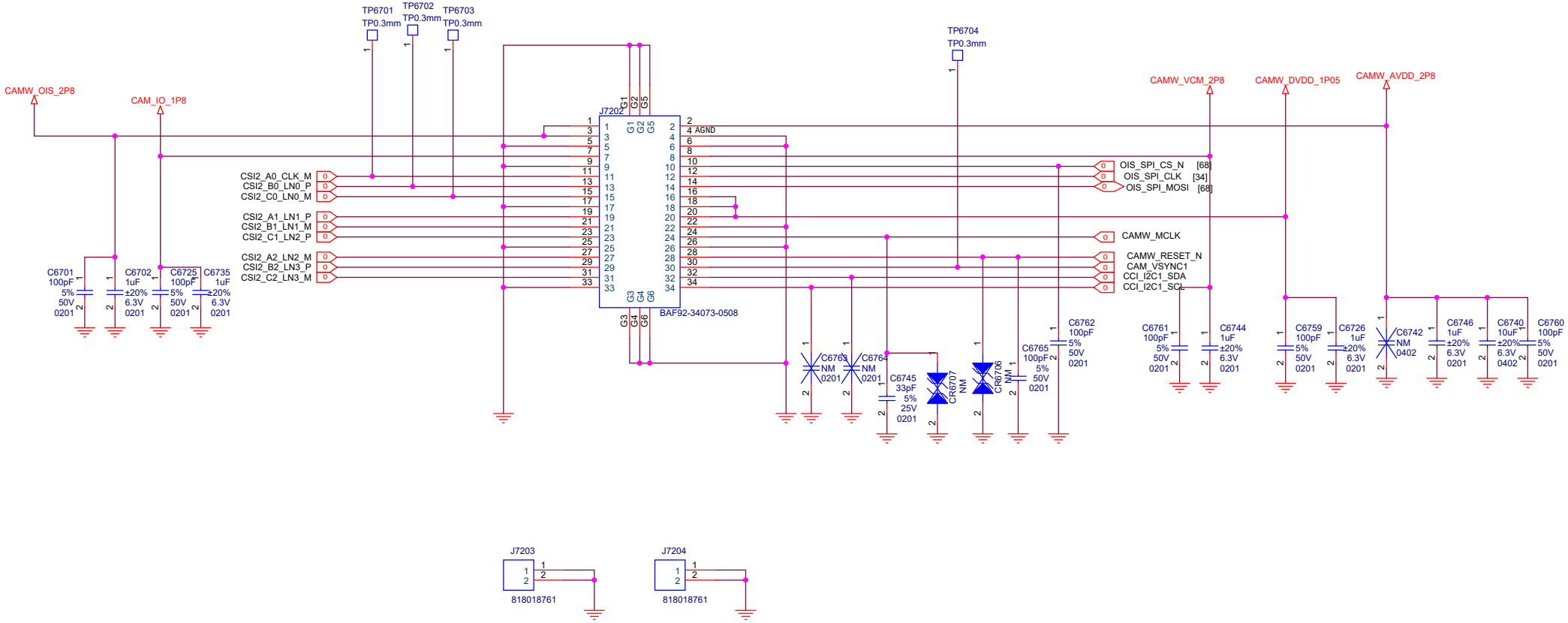

Title	8350 EVB	
Size A3	Document Number WIDE&TELE CAMERA	Rev P0
Date: Monday, October 26, 2020	Sheet 67 of 83	

ULTRA

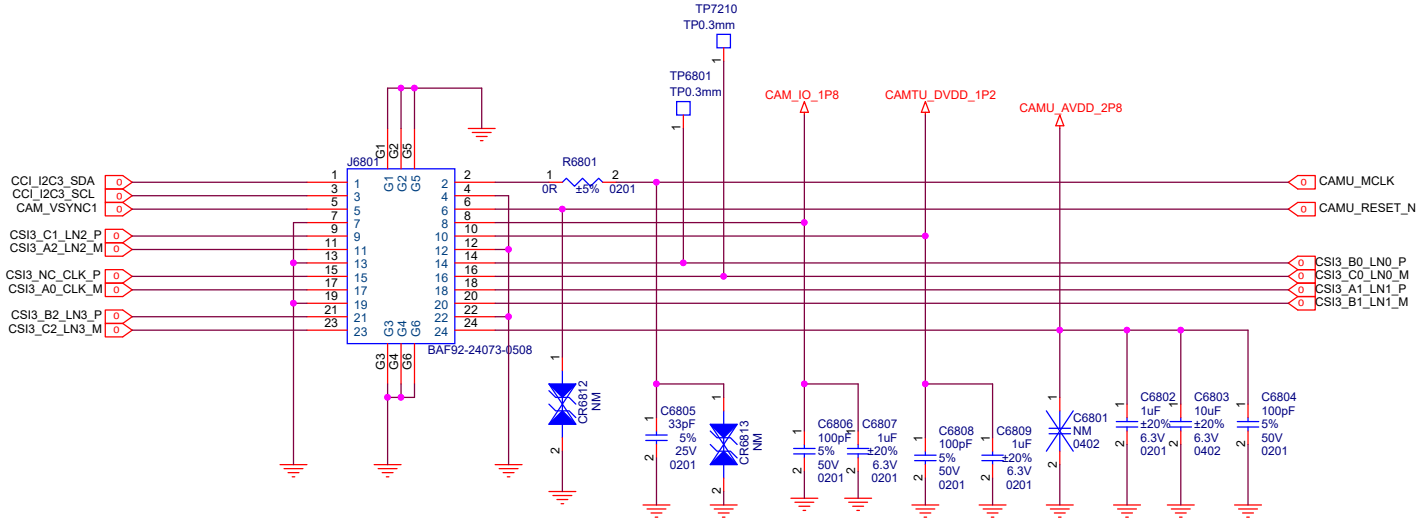

TELE

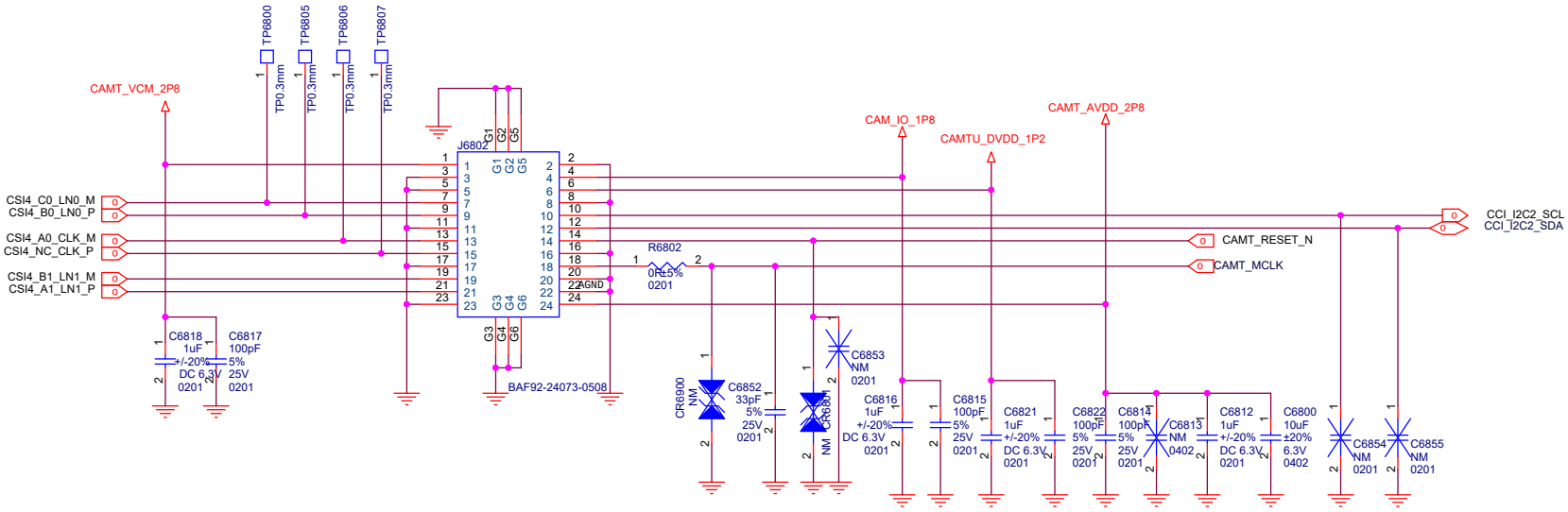

Title	8350 EVB	
Size A3	Document Number ULTRA CAMERA	Rev P0
Date: Monday, October 26, 2020	Sheet 68 of 83	

FRONT AVDD

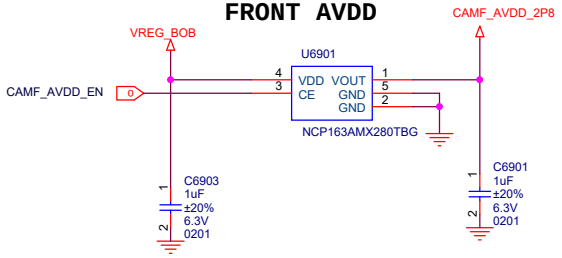

WIDE AVDD

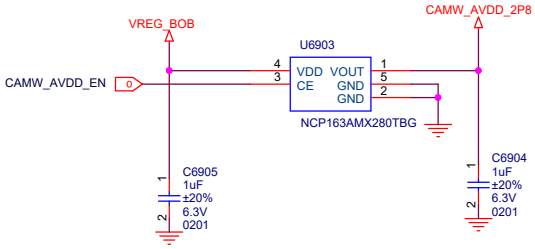

TELE AVDD

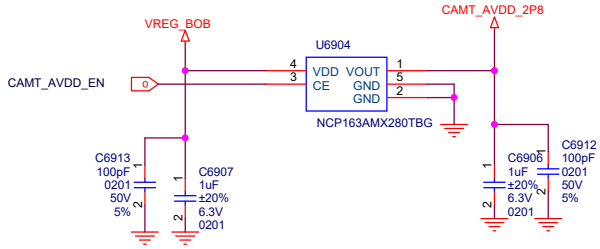

FRONT DVDD

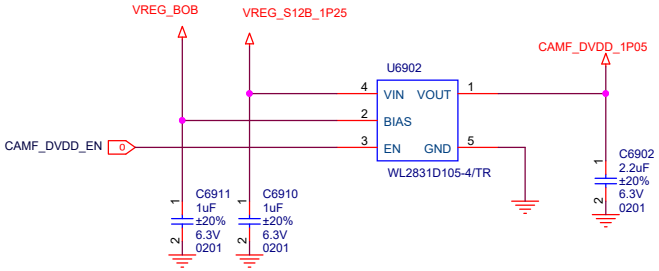

Title	8350 EVB	
Size A3	Document Number CAMERA LDOs	Rev P0
Date: Monday, October 26, 2020	Sheet 69 of 83	

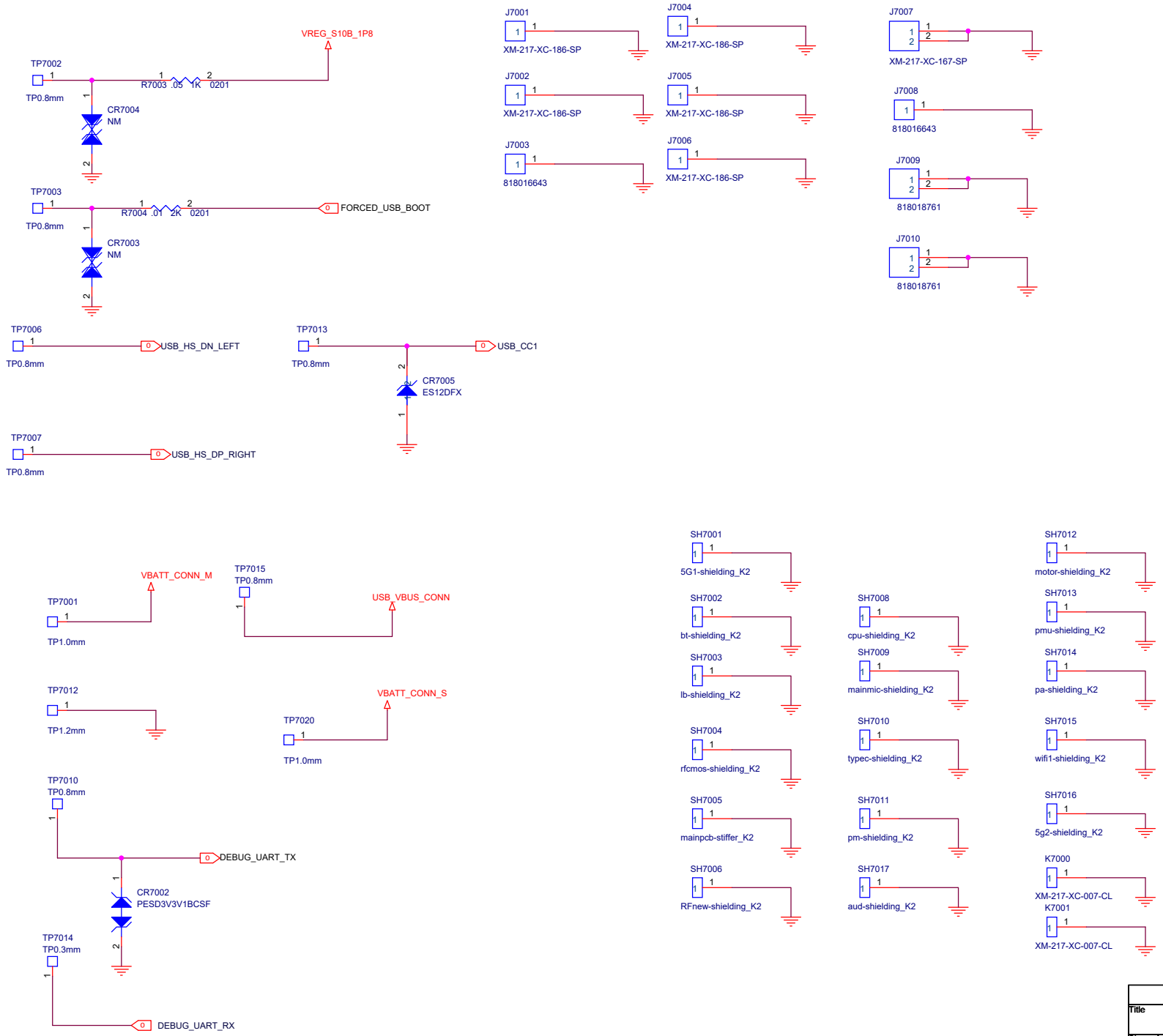

Title	8350 EVB	
Size A3	Document Number TEST POINT	Rev P0
Date: Monday, October 26, 2020	Sheet 70 of 83	

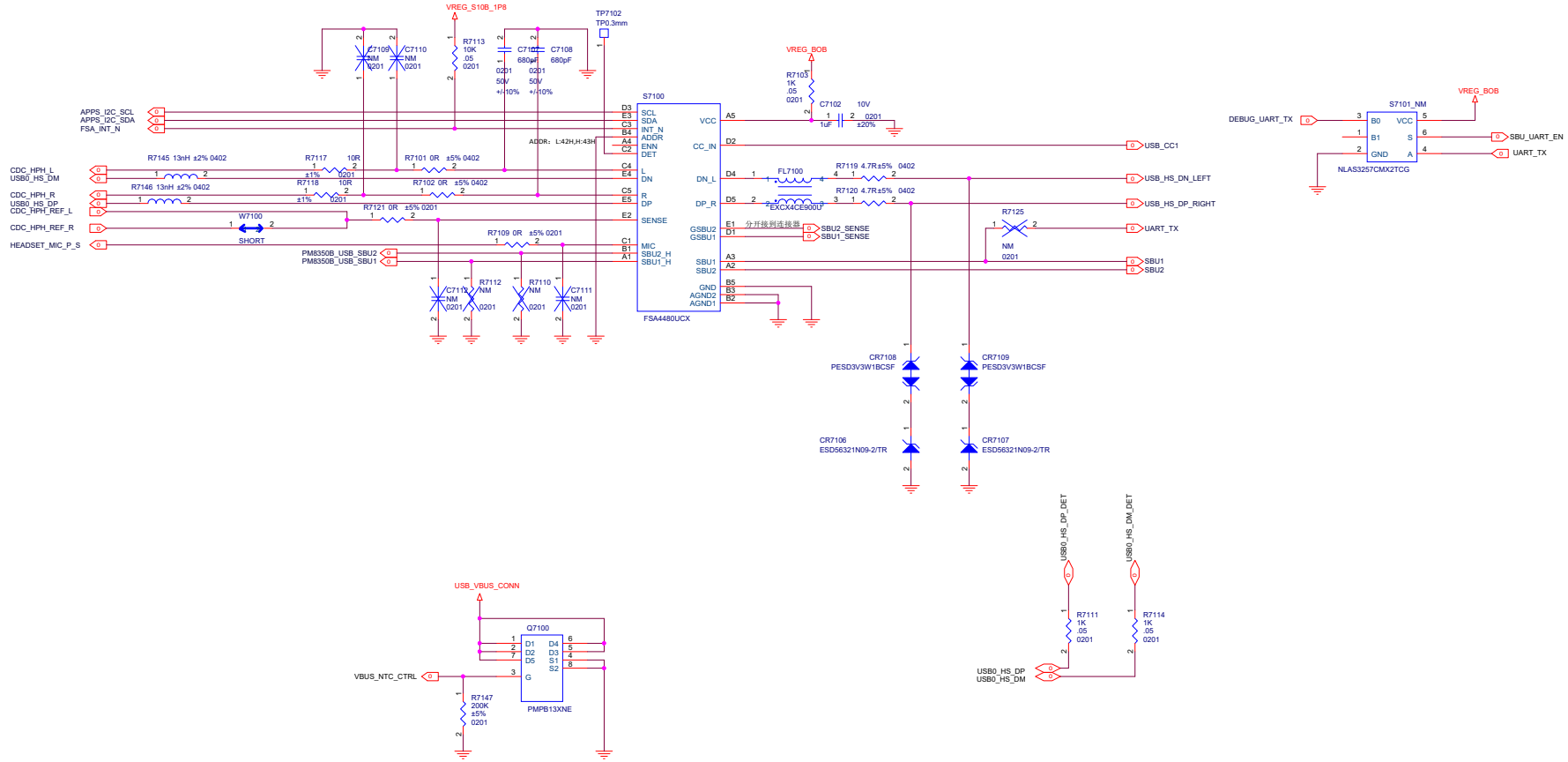

Title	8350 EVB		
Size A2	Document Number USB CONNECTOR		Rev P0
Date: Monday, October 26, 2020	Sheet 71 of 83		

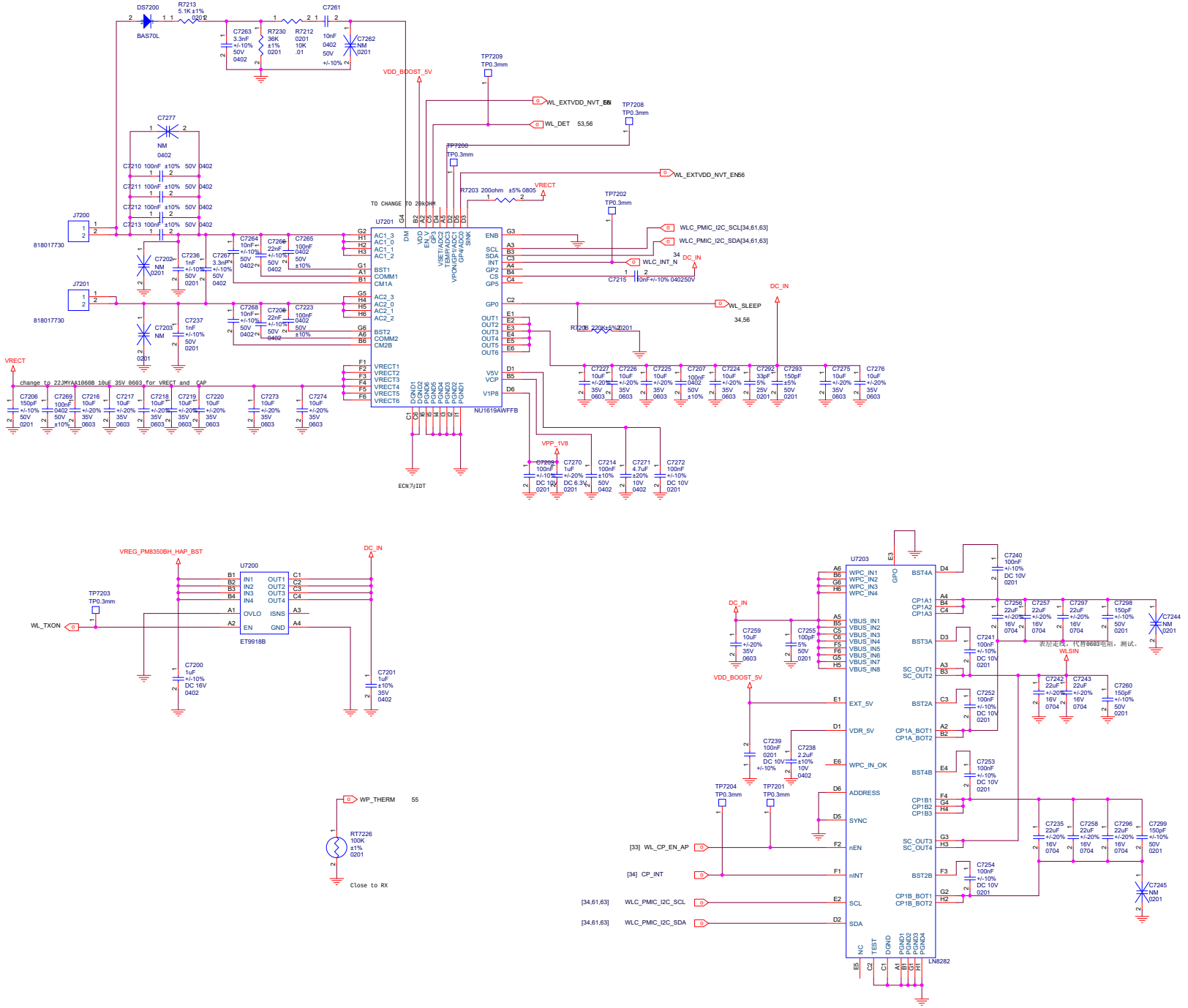

Title	8350 EVB		
Size A2	Document Number WL POWER		Rev P0
Date: Monday, October 26, 2020	Sheet 72 of 83		

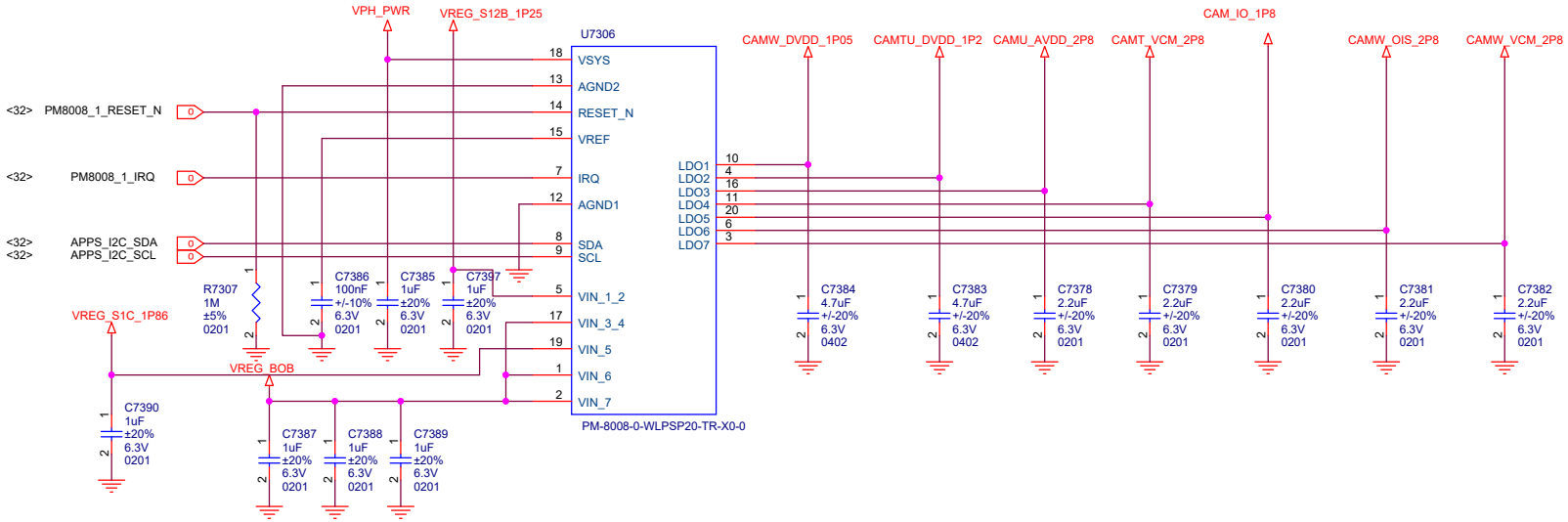

Title	8350 EVB		
Size A3	Document Number PM8009		Rev P0
Date: Monday, October 26, 2020	Sheet 73 of 83		

Title	F11 SUB	
Size A3	Document Number <Doc>	Rev P0A
Date: Monday, October 26, 2020	Sheet 75 of 82	

Title	<Title>
Size A3	Document Number <Doc>
Rev	<RevCode>
Date: Monday, October 26, 2020	Sheet 76 of 77

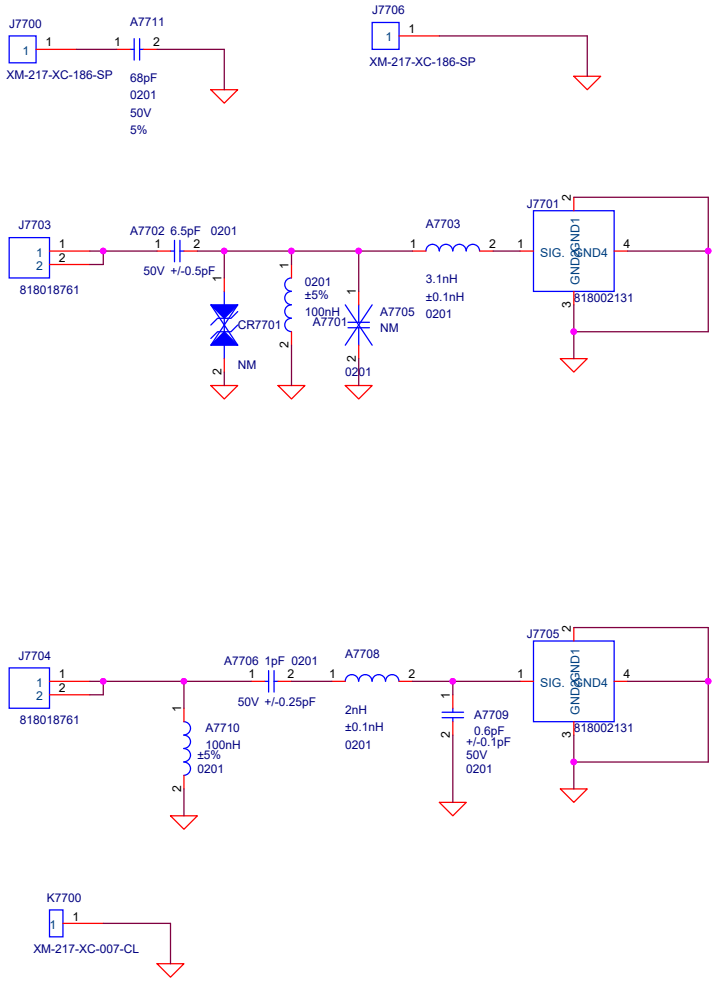

Title	K2	
Size A3	Document Number ANT_SUB	Rev P0
Date: Monday, October 26, 2020	Sheet 77 of 77	